CK-10421-A

ISSUE	ITEM	CHANGED FROM	DATE	CN. NO.	DRAFTS	CHECKER	ENG. APP.
A	1	C102 ADDED	8·11·62	1	J P C		EMN

REQ.	ITEM	PART NO.	DESCRIPTION	SYMBOL

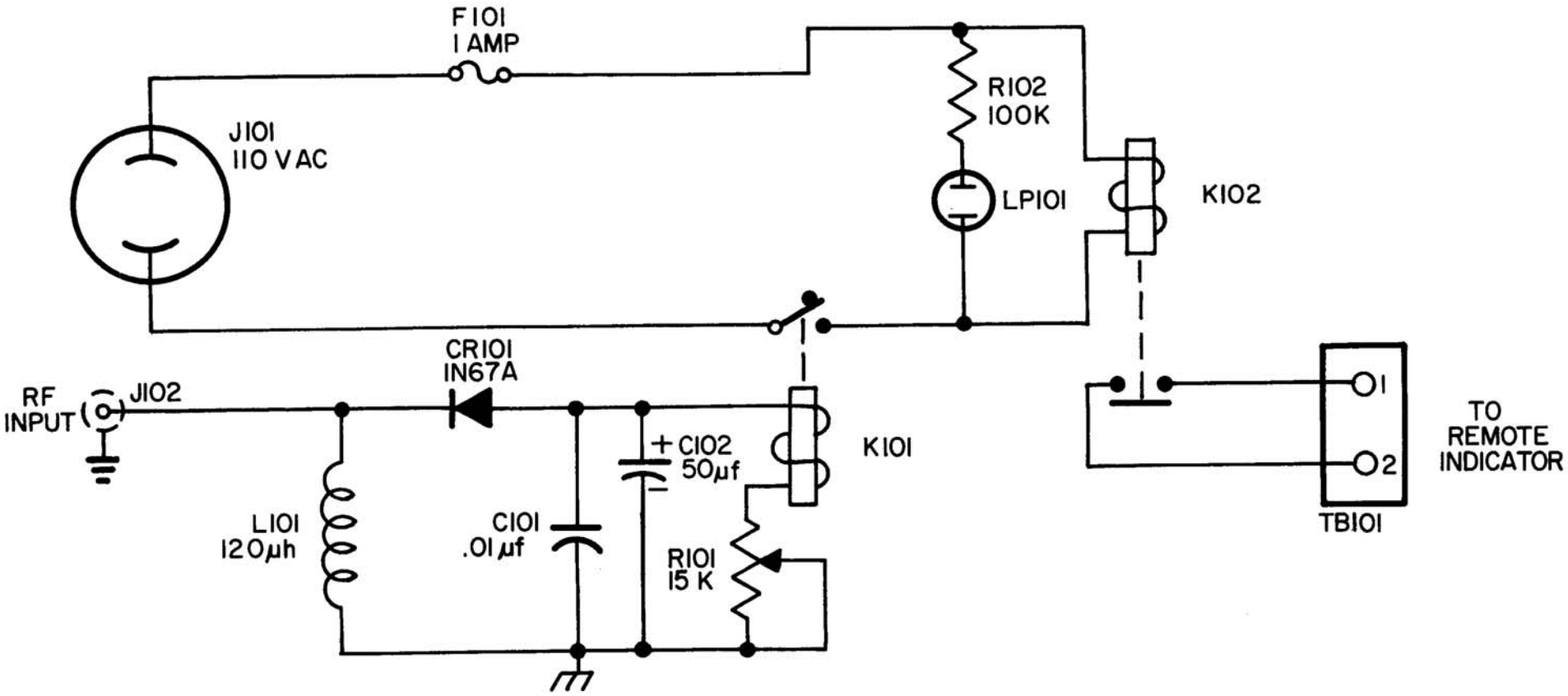

		A 10331	JAN. 22/62
MODEL	PROJECT NO.	ASS'Y. NO.	DATE

USED ON

MAXIMUM ALLOWABLE TOLERANCES HAVE BEEN DETERMINED AND DEVIATIONS WILL BE CAUSE FOR REJECTION. REMOVE ALL BURRS AND SHARP EDGES

IF IT IS FOUND DESIRABLE TO CHANGE ANY TOLERANCE OR OTHER DETAIL SPECIFIED ON THIS DRAWING NOTIFY THE PURCHASER PROMPTLY.

TOLERANCES

ALL OTHERS: DEC. DIM. ± ; FRAC. DIM. ± ; ANGULAR DIM. ±

SCALE

DIMENSIONS IN INCHES UNLESS OTHERWISE SPECIFIED

DRILL, PUNCH, COMMERCIAL STOCK SIZES AND MANUFACTURERS TOLERANCES ARE NOT INCLUDED.

STOCK SIZE

MATERIAL | WEIGHT PER PC.

TYPE & TEMPER

HEAT TREAT. SPEC.

FINISH & SPEC. NO.

TMC (Canada) LIMITED
OTTAWA ONTARIO

SCHEMATIC - "ON AIR" INDICATOR UNIT

J.P.C.	K.H	
DRAWN	ELEC. DES. APP.	MECH. DES. APP.
CHECKED	FINAL APPROVAL	

CK10421 A

FORM—127