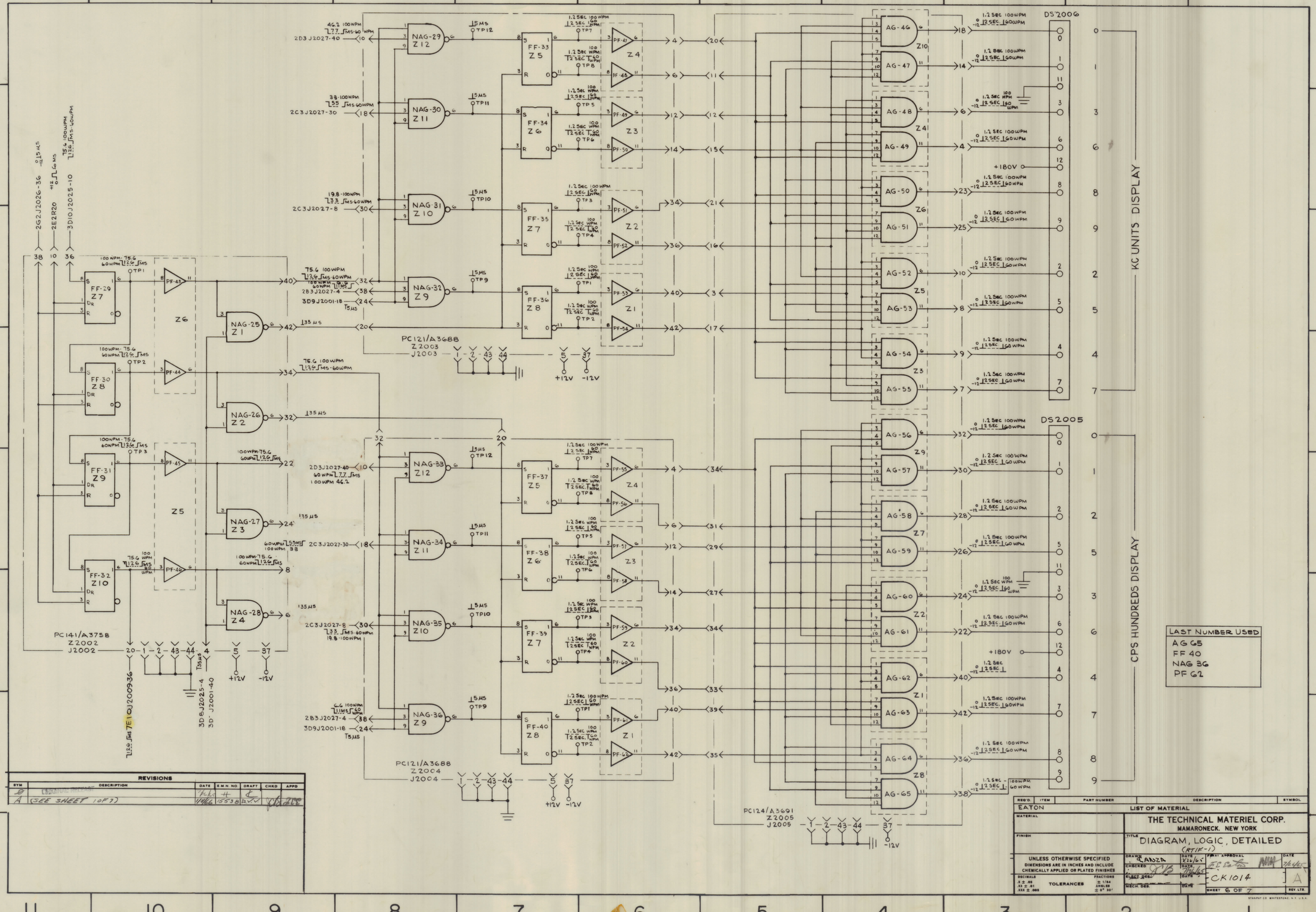

LAST NUMBER USED
AG 65
FF 40
NAG 36
PF 62

REVISIONS						
SYM	DESCRIPTION	DATE	E.M.N. NO.	DRAFT	CHKD	APPD
D	ORIGINAL RELEASE	7/26/65	H	E		
A	(SEE SHEET 1 OF 7)	11/4/66	15538	A.V.V.		

REQ'D.	ITEM	PART NUMBER	DESCRIPTION	SYMBOL

EATON — LIST OF MATERIAL

MATERIAL

FINISH

THE TECHNICAL MATERIEL CORP.
MAMARONECK, NEW YORK

TITLE: DIAGRAM, LOGIC, DETAILED (RTIF-1)

UNLESS OTHERWISE SPECIFIED DIMENSIONS ARE IN INCHES AND INCLUDE CHEMICALLY APPLIED OR PLATED FINISHES

DECIMALS .X ± .05 .XX ± .01 .XXX ± .005 — TOLERANCES — FRACTIONS ± 1/64 ANGLES ± 0° 30'

DRAWN: CANZA — DATE: 7/26/65
CHECKED: — DATE: 7/26/65
ELECT. DES. — DATE
MECH. DES. — DATE

FINAL APPROVAL: F.E. Eaton — DATE: 7/26/65

CK1014 — A

SHEET 6 OF 7 — REV. LTR.

STANPAT CO. WHITESTONE, N.Y. U.S.A.