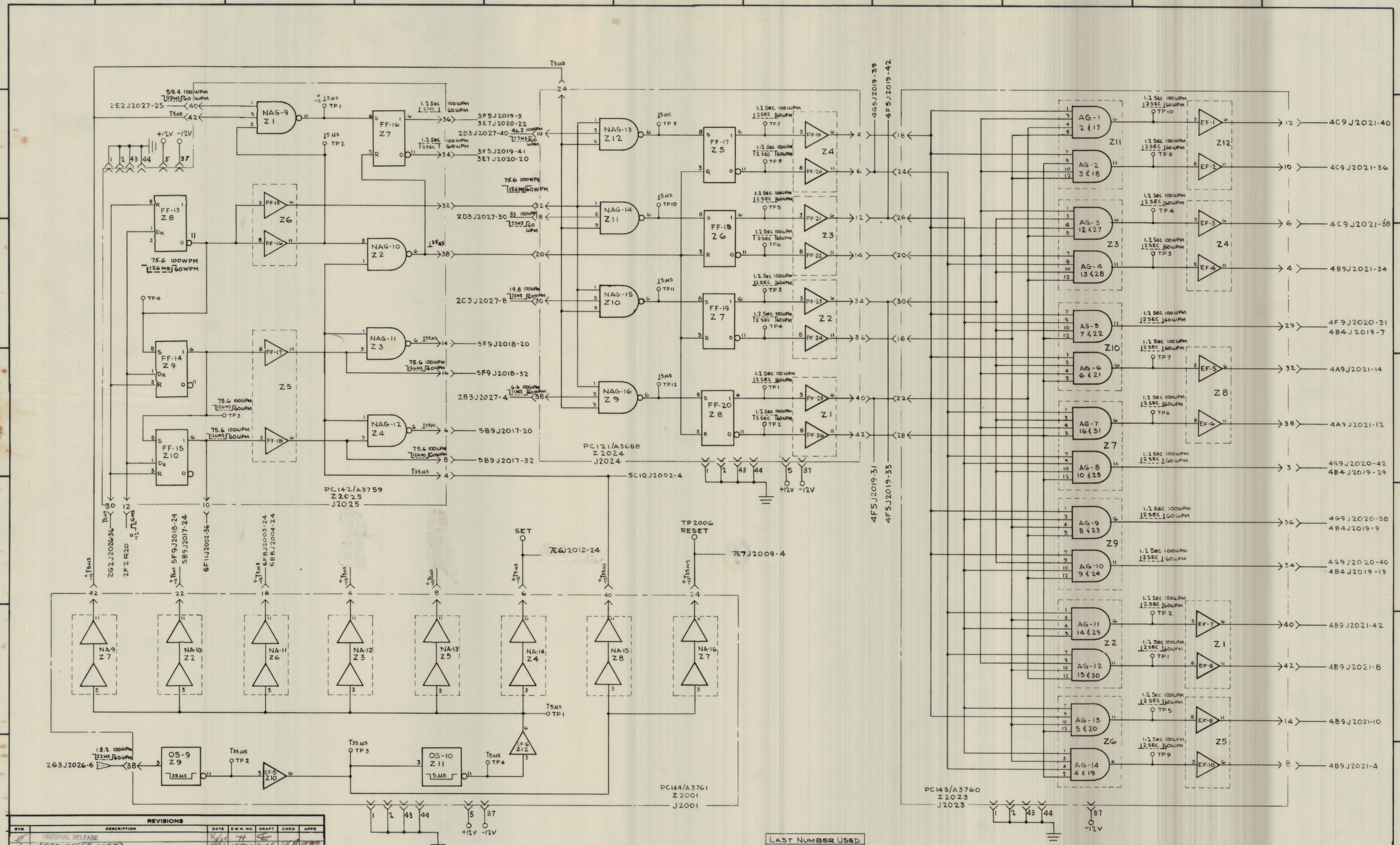

REVISIONS						
SYM	DESCRIPTION	DATE	E.M.N. NO.	DRAFT	CHKD	APPD
Ø	ORIGINAL RELEASE	7/26/65	H	E		
A	(SEE SHEET 1 OF 7)	11/4/66	15538	EVV	[illegible]	[illegible]

LAST NUMBER USED
AG 14
CF 6
EF 10
FF 20
NA 16
NAG 16
OS 10
PF 26

REQ'D	ITEM	PART NUMBER	DESCRIPTION	SYMBOL
EATON			LIST OF MATERIAL	

MATERIAL

FINISH

THE TECHNICAL MATERIEL CORP.
MAMARONECK, NEW YORK

TITLE: DIAGRAM, LOGIC, DETAILED (RTIF-1)

UNLESS OTHERWISE SPECIFIED DIMENSIONS ARE IN INCHES AND INCLUDE CHEMICALLY APPLIED OR PLATED FINISHES

DECIMALS X ± .05, XX ± .01, XXX ± .005 — TOLERANCES — FRACTIONS ± 1/64, ANGLES ± 0° 30'

DRAWN: EAUZA — DATE: 7/26/65
CHECKED: [illegible] — DATE: 7/26/65
ELECT. DES. — DATE
MECH. DES. — DATE

FINAL APPROVAL: [illegible] — DATE: 7/26/65

CK1014 — A

SHEET 3 OF 7 — REV LTR