STANDARD DRAWING

TMC PART No.	MFGR PART No.	DIMENSIONS A	B	C	MATERIAL
CI135-1	CF123-05	2.400±2%	1.400±2%	.500±.030	0-5

REQ. PER UNIT	USED ON MODEL	ASS'Y. NO.	DATE
	GPT-10KLF		6-16-65

CI135 B

		MATERIEL
PROPERTIES	UNIT	.05
INITIAL PERM @ 100 KC	–	2400
MAX. PERM	–	4880
SAT. FLUX DENSITY	GAUSS	4700
RESIDUAL MAG.	GAUSS	1450
COERCIVE FORCE	DERSTED	0.16
TEMP. COEF OF INITIAL FORCE	%°C	NOT RATED
CURIE POINT	+ °C	210°C
VOL. RESISTIVITY	OHM-CM	LOW
LOSS FACTOR @ 100 KC		.401

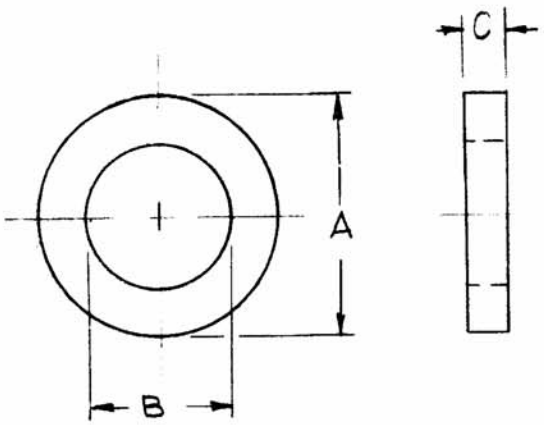

MARKING: MATERIAL TYPE, OR COLOR CODE (VIOLET & WHITE), OPTIONAL

SYM	DESCRIPTION	DATE	CH. NO.	DRAFTS	CHECKER	ENG. APP.
B	MFG NO WAS F568, A WAS 2, 3/8 B WAS 1-3/8, C WAS 1/2, "D" DELE.	6-30-66	16483	[illegible]	JCB	[illegible]
A	"D" WAS 7/16; ADDED "C" DIM AND NOTE	5-24-66	16270	C.H.	JCB	JC
Ø	ORIGINAL RELEASE FOR PRODUCTION	6-17-65	[illegible]	JC		

UNLESS OTHERWISE SPECIFIED DIMENSIONS ARE IN INCHES AND INCLUDE CHEMICALLY APPLIED OR PLATED FINISHES

SCALE: DO NOT SCALE

DECIMALS .X ±.05 .XX ±.01 .XXX ±.005 — TOLERANCES — FRACTIONS ± 1/64 ANGLES ± 0° 30′

CODE: C — S401 - 213

REQ.	ITEM	PART NO.	BUDETTI DESCRIPTION	SYMBOL

STOCK SIZE

MATERIAL

TYPE & TEMPER | HEAT TREAT. SPEC.

FINISH & SPEC. NO.

THE TECHNICAL MATERIEL CORP.
MAMARONECK. NEW YORK

CORE, TOROID

DRAWN	CHECKED	FINAL APPROVAL
G.D.L	JCB	[illegible] 6/17/65

ELEC. DES. APP.	MECH. DES. APP.		
	JC 6-17-65	CI135	B

TMC FORM 108-A

REPROVEL NO. 440H 23845