THE CONTENTS OF THIS DRAWING ARE THE EXCLUSIVE PROPERTY OF THE TECHNICAL MATERIEL CORP. ITS UNAUTHORIZED USE FOR REPRODUCTION IN WHOLE OR IN PART IS STRICTLY FORBIDDEN.

REQ. PER UNIT	USED ON MODEL	ASS'Y. NO.	DATE		
1	VLR-1	A-3167	5-27-63	CI 131	0

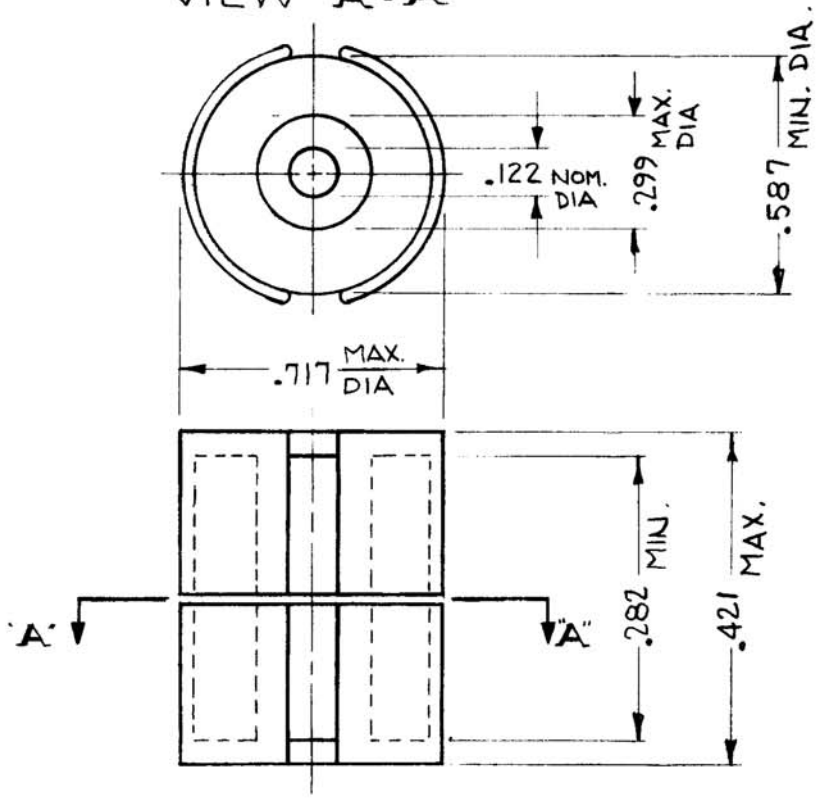

~SPECIFICATIONS~

1 - TEMPERATURE COMPENSATED CUP CORE.
2 - INDUCTANCE (MH/1000 TURNS) - 160 ± 3%
3 - TEMPERATURE COEFFICIENT OF "L" (+PPM/°C.) - 70-180.
4 - OPERATING TEMPERATURE RANGE - 0°C - 50°C.

NOTE:
CORES MUST BE STOCKED AND USED AS A MATCHED SET.

MFG PART NO. TC-202-160

SYM	DESCRIPTION	DATE	CH. NO.	DRAFTS	CHECKER	ENG. APP.
0	ORIGINAL RELEASE FOR PRODUCTION	5/11/64	0	A.M.	@	

UNLESS OTHERWISE SPECIFIED DIMENSIONS ARE IN INCHES AND INCLUDE CHEMICALLY APPLIED OR PLATED FINISHES

SCALE 2:1

DECIMALS .X ±.05 .XX ±.01 .XXX ±.005 — TOLERANCES — FRACTIONS ± 1/64 ANGLES ± 0° 30'

CODE C — S401-213

REQ.	ITEM	PART NO.	DESCRIPTION	SYMBOL
			M. GELLMAN	

STOCK SIZE

MATERIAL

TYPE & TEMPER — HEAT TREAT. SPEC.

FINISH & SPEC. NO.

THE TECHNICAL MATERIEL CORP.
MAMARONECK. NEW YORK

CORE, CUP

DRAWN	CHECKED	FINAL APPROVAL
[signature]	@	[signature]

ELEC. DES. APP.	MECH. DES. APP.		
[signature]	[signature]	CI 131	0

TMC FORM NO. 108-A

STANDARD DRAWING

OGILVIE PRESS, INC., BROOKLYN 17, N. Y. REPROVEL NO. 400H 3787