TMC PART NUMBER	MFR. PART NUMBER	CAPACITANCE PER SECT. MIN.	CAPACITANCE PER SECT. MAX.	QUAN. OF SECT.	PLATES PER SECT.	PLATE SPACING (NOM.)	DIMENSIONS L	DIMENSIONS S
CB-168-1	167-457-3	12.9	342	1	59	.020	3-5/32	1/2
CB168-2	9411-03-30117	10	210	1	40	.020	3-5/32 MAX	1/2

CB-168

REVISIONS

SYM	DESCRIPTION	DATE	E.M.N. NO.	DRAFT	CHKD	APPD
A	TMC PART NUMBER CHART LINE CB168-2 ADDED ON MODEL BLOCK AX411, AX412 ADDED	9/13/66	14771			
B	MFG. PT. NO. ADDED TO -2, S401-12 REF. ADDED. S401-47 REF. REV.	1/11/66	15030	Jc		
C	DRAWING CLARIFIED	12.6.66	17361			

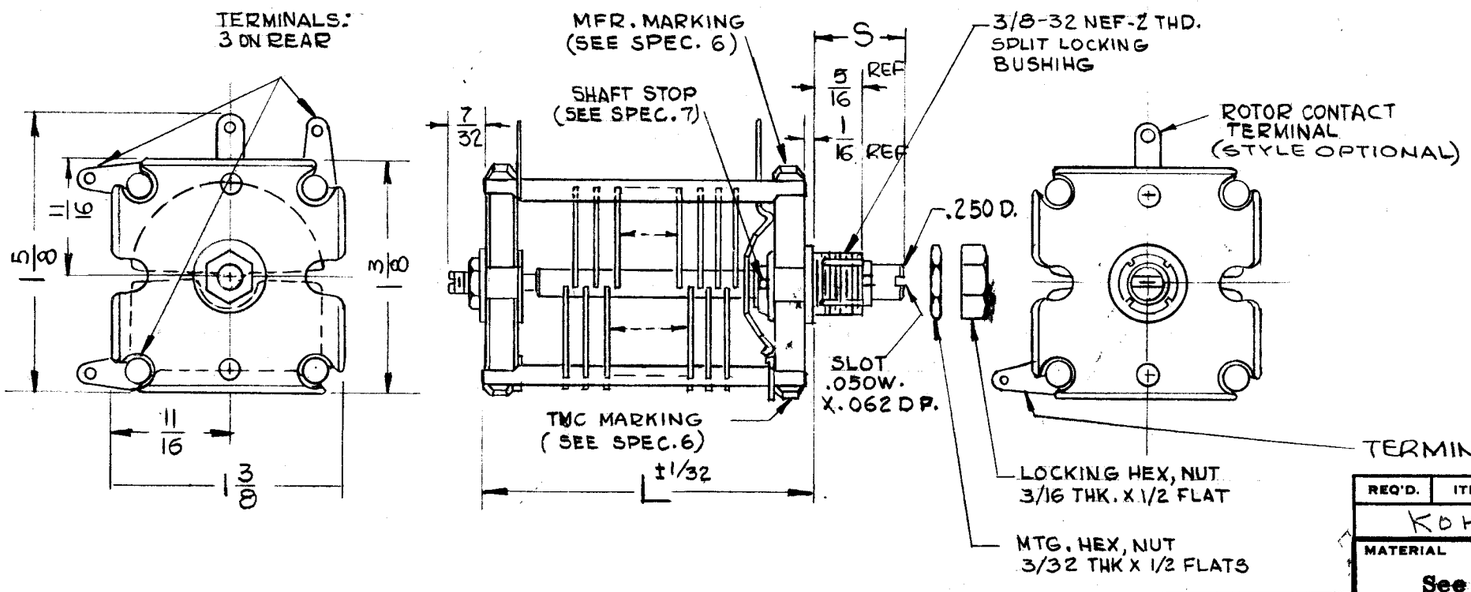

SPECIFICATIONS

1. TUNING CHARACTERISTIC: STRAIGHT LINE CAPACITY.
2. AC PEAK VOLTAGE: 1000 V.
3. CAPACITY INCREASES IN CLOCKWISE ROTATION.
4. MATERIALS AND FINISHES:
   A) STATOR PLATES - BRASS, NICKEL PLATE
   B) ROTOR PLATES - BRASS, NICKEL PLATE
   C) SUPPORT RODS - BRASS, NICKEL PLATE
   D) SHAFT - BRASS, NICKEL PLATE
   E) ROTOR CONTACT - BERYLLIUM COPPER, SILVER PLATE
   F) TERMINALS - BRASS, TINNED
   G) END PLATES - 3/16 THICK STEATITE
   H) MOUNTING AND LOCKING NUTS - BRASS, NICKEL PLATE
5. CONSTRUCTION: ROTOR BEARINGS AND STATOR SUPPORT RODS SOLDERED TO STEATITE END PLATES, OR EQUIVALENT OPTIONAL DESIGN.
6. MARKING: THE TMC PART NUMBER SHALL BE RUBBER STAMPED ON EDGE SPECIFIED.
   THE MANUFACTURER'S PART NUMBER AND CAPACITY RATINGS SHALL BE STAMPED ON EDGE SPECIFIED.
7. SHAFT STOP: A SHAFT STOP SHALL BE PROVIDED AT MINIMUM AND MAXIMUM CAPACITY. TOTAL ROTATION, 180°.

REQ'D.	ITEM	PART NUMBER	DESCRIPTION	SYMBOL
KOHN			LIST OF MATERIAL	

Q'T'Y./UNIT	MODEL USED ON	ASS'Y. NO.
1 (-2)	TTR-10	AX411,412
1(-1)	TTR-10	AX-410
1(-1)	TTR-10	AX-409

SCALE: Do Not Scale
CODE: S401-12 (-1 & -2) S401-47 (-1)

THE CONTENTS OF THIS DRAWING ARE THE EXCLUSIVE PROPERTY OF THE TECHNICAL MATERIEL CORP. ITS UNAUTHORIZED USE OR REPRODUCTION IN WHOLE OR IN PART IS STRICTLY FORBIDDEN.

MATERIAL: See Specifications
FINISH: See Specifications

UNLESS OTHERWISE SPECIFIED DIMENSIONS ARE IN INCHES AND INCLUDE CHEMICALLY APPLIED OR PLATED FINISHES

TOLERANCES
DECIMALS: .X ± .05, .XX ± .01, .XXX ± .005
FRACTIONS: ± 1/64
ANGLES: ± 0° 30'

THE TECHNICAL MATERIEL CORP.
MAMARONECK, NEW YORK

TITLE: CAPACITOR, VARIABLE, AIR DIELECTRIC

DRAWN G.D.L	DATE 5-24-63	FINAL APPROVAL	DATE
CHECKED	DATE 5-29-63		
ELECT. DES. RKOHN	DATE 29MAY63	CB-168	C
MECH. DES. W. JORDAN	DATE 29MAY63	SHEET	REV. LTR.

NOTES

TMC FORM 109