CB-150 (B)

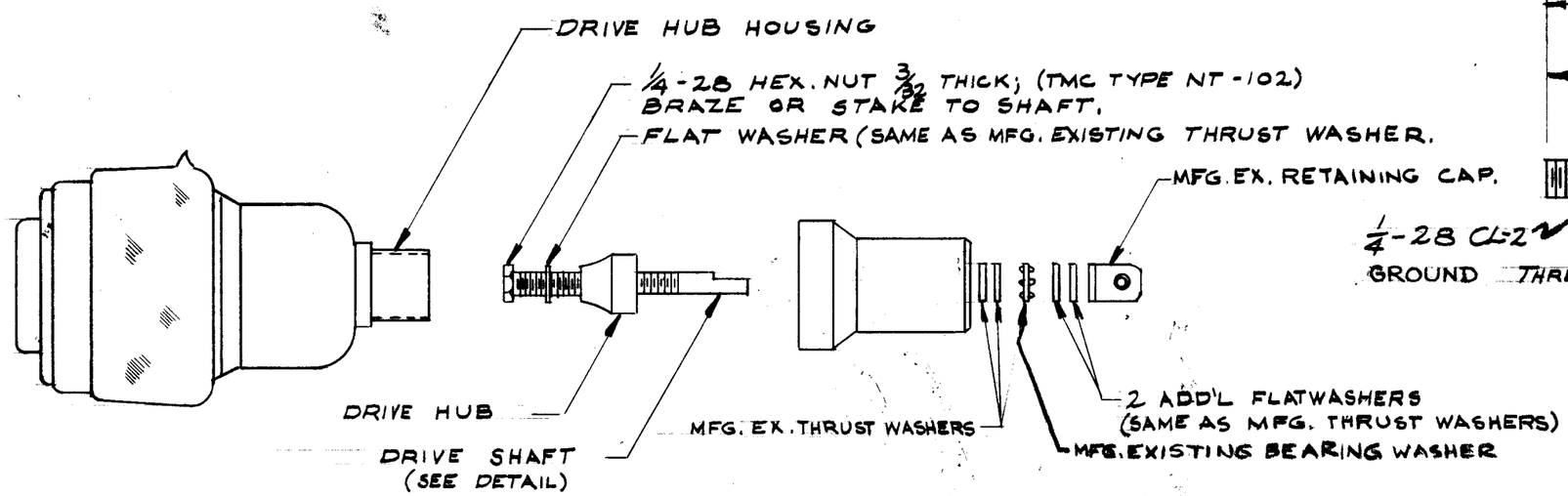

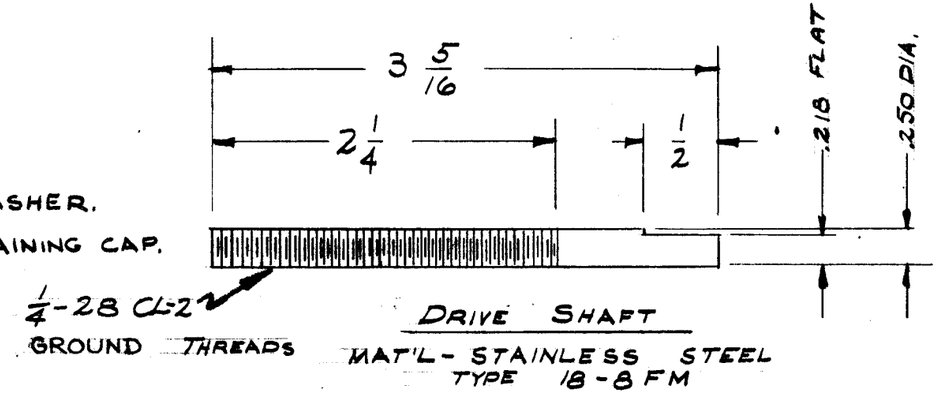

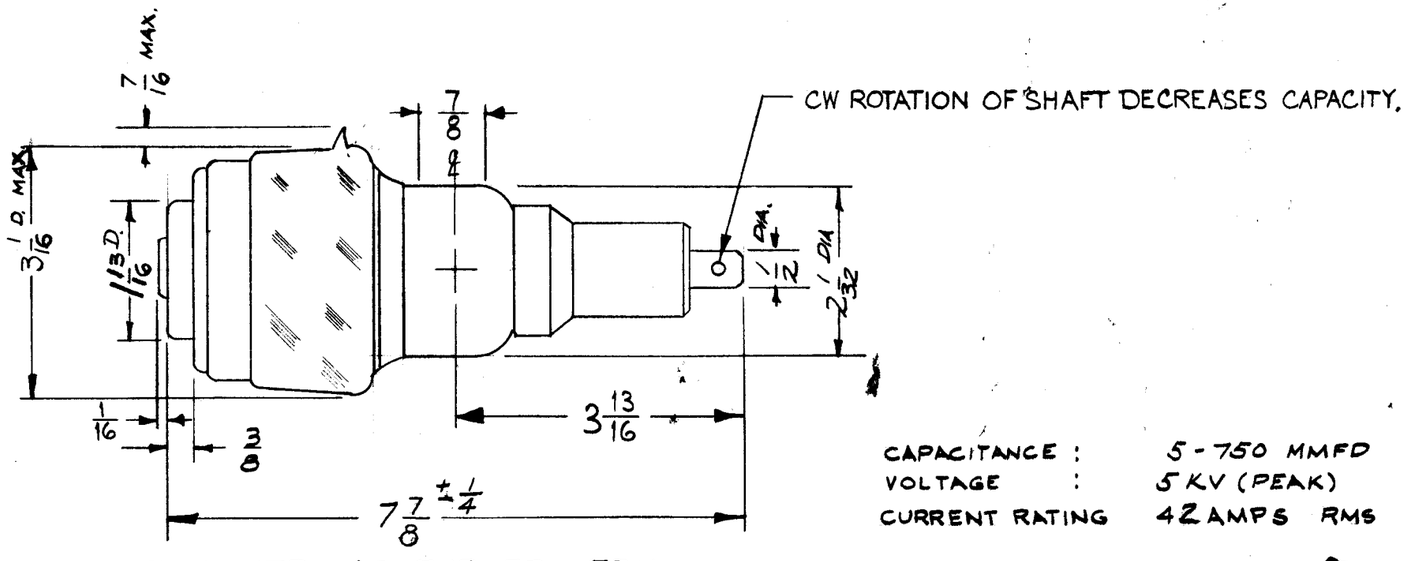

FINISHED ASSEMBLED ITEM

CAPACITANCE : 5-750 MMFD
VOLTAGE : 5 KV (PEAK)
CURRENT RATING 42 AMPS RMS

FLANGE REF. (TMC ONLY) { FIXED END - PO-185-1
VAR. END - PO-185-2

REF: TMC CB-143-750-5A
UCSL 5-750 5KV } MODIFIED AS SHOWN

ISSUE	ITEM	CHANGED FROM	DATE	CH. NO.	DRAFTS	CHECKER	ENG. APP.
C	1	ON TOL. CHART FRAC. DIM. 1/32 ADDED	11-9-61	5815	G.D.L	[illegible]	[illegible]
B	1	DIM. 7 7/8 ± 1/4 WAS 7 3/4 ± 1/4	8-5-61	5378	GDL	RU	[illegible]
A	2	CW ROTATION ADDED	5-15-61	4881	[illegible]	[illegible]	[illegible]
	1	DIMS. 3 13/16, 7/8 & 1/16 ADDED					

TOLERANCES

DEC. DIM. ±
FRAC. DIM. ± 1/32
ANGULAR DIM. ±

SCALE:

MAXIMUM ALLOWABLE TOLERANCES HAVE BEEN DETERMINED AND ANY DEVIATIONS WILL BE CAUSE FOR REJECTION. REMOVE ALL BURRS AND SHARP EDGES

REQ. PER UNIT	MODEL	PROJECT NO.	ASS'Y. NO.	DATE
1	RFC-1	AM-111		3-4-60
1	RFD-1	AM-111	A-	3-4-60

USED ON

REQ.	ITEM	PART NO.	DESCRIPTION	SYMBOL

STOCK SIZE

MATERIAL

TYPE & TEMPER | HEAT TREAT. SPEC. | DRAWN [illegible] 11-17-59 | CHECKED | FINAL APPROVAL

FINISH & SPEC. NO. | ELEC. DES. APP. | MECH. DES. APP.

THE TECHNICAL MATERIEL CORP.
MAMARONECK, NEW YORK

CAPACITOR, VAR., VAC., 5-750 mmfd.
(W/LOCKING SHAFT)

CB-150 (B)

FORM 109-A