CB-143 B

CAPACITANCE AVAILABLE		DIM. "L"
TMC CODE	CAP. IN MMFD.	
750	5-750	7 3/4 ± 1/4
1000	7-1000	7 9/16 ± 1/4

CHART 1

VOLTAGE AVAILABLE	
TMC CODE	VOLTAGE (Peak)
3	3KV
5	5KV

CHART 2

FLANGE ARRANGEMENT	
TMC CODE	ARRANGEMENT
A	NO FLANGES
B	NO VARIABLE END FLANGE, FIXED END FLANGE WELDED TO END

CHART 3

Note - Current Rating - 42 Amps RMS.

NOTE - This Flange Required Only when called for in Part No., as per Type "B" Flange Arrangement.

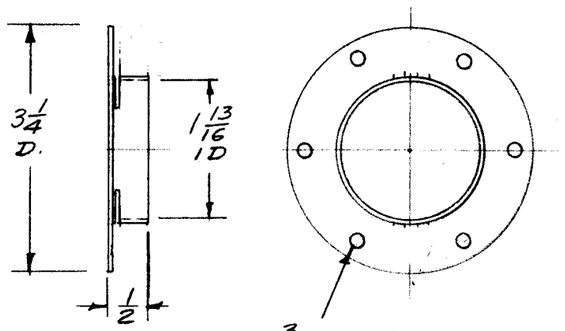

6 Holes, 3/16 D, 60° Apart, on 1 3/8 R.

FIXED END FLANGE
TYPE FM1J
w/o Locking Devices
.062 Copper, Silver Plated

Clockwise Rotation of Shaft Decreases Capacity.

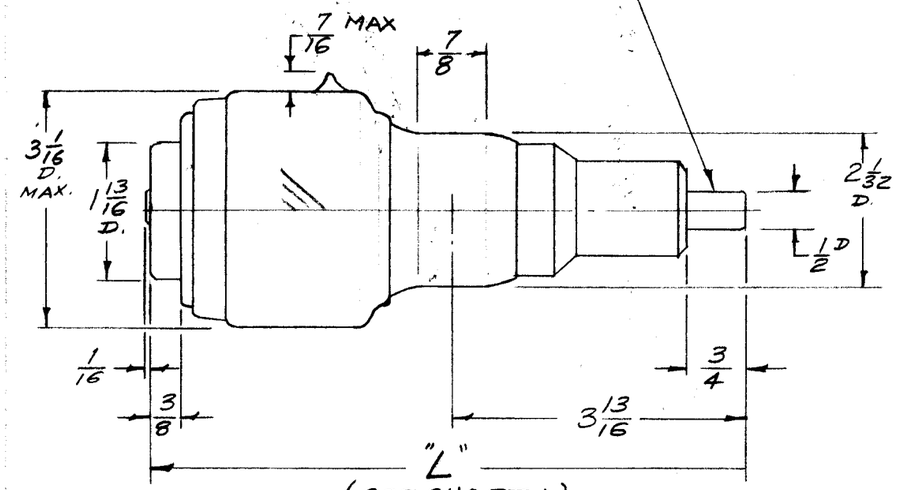

NOTICE TO PERSONS RECEIVING THIS DRAWING

THE TECHNICAL MATERIEL CORPORATION claims proprietary right in the material disclosed hereon. This drawing is issued in confidence for engineering information only and may not be reproduced or used to manufacture anything shown hereon without permission from THE TECHNICAL MATERIEL CORPORATION to the user. This drawing is loaned for mutual assistance and is subject to recall at any time.

Property of:
THE TECHNICAL MATERIEL CORPORATION
MAMARONECK, NEW YORK

TMC PART NO. TO BE IN FOLLOWING FORM:

CB-143-1000-3 A

BASIC TMC PART NO.	MAX. CAPACITANCE DESIRED (IN MMFD) See CHART # 1 TMC CODE	VOLTAGE DESIRED (IN KV) CHART 2 TMC CODE	FLANGE ARRANGEMENT DESIRED See CHART 3 TMC CODE

Example: CB-143-750-5A = Capacitor, Variable, Vacuum, 5-750 MMFD, 5KV, NO FLANGES

REF. NOTE -
When this Capacitor requires loose Mtg. Flanges, Use TMC Dwg. No. PO-185-1 for Fixed End & PO-185-2 for Variable End.

ISSUE	ITEM	CHANGED FROM	DATE	CH. NO.	DRAFTS	CHECKER	ENG. APP.
B	1	ON FIXED END FLANGE TYPE WAS FM1C	8-5-61	5378	G.D.L	RU	[illegible]
A	1	FLANGE CHART CHGD. REF NOTES ADDED	9/18/59	1309	[illegible]	[illegible]	[illegible]

TOLERANCES

DEC. DIM. ±
FRAC. DIM. ± 1/32
ANGULAR DIM. ± 1°

SCALE: S401-48 (UCSL)

MAXIMUM ALLOWABLE TOLERANCES HAVE BEEN DETERMINED AND ANY DEVIATIONS WILL BE CAUSE FOR REJECTION. REMOVE ALL BURRS AND SHARP EDGES

REQ. PER UNIT	MODEL	PROJECT NO.	ASS'Y. NO.	DATE
	USED ON			

REQ.	ITEM	PART NO.	DESCRIPTION	SYMBOL
			THE TECHNICAL MATERIEL CORP. MAMARONECK. NEW YORK	
		STOCK SIZE	CAPACITOR, VARIABLE, VACUUM	
		MATERIAL		
		TYPE & TEMPER / HEAT TREAT. SPEC.	DRAWN 6/27/59 / CHECKED [illegible] / FINAL APPROVAL [illegible]	
		FINISH & SPEC. NO.	ELEC. DES. APP. S.G. / MECH. DES. APP.	CB-143 B