CB-142 G

CAPACITANCE AVAILABLE		"L" DIM.
TMC CODE	CAP. IN. MMFD.	
250	5-250	7-11/16 ± 1/4
500	12-500	7-7/8 ± 1/4

CHART 1

VOLTAGE AVAILABLE	
TMC CODE	VOLTAGE (Peak)
7.5	7.5 KV
10	10 KV
15	15 KV

CHART 2

FLANGE ARRANGEMENT	
TMC CODE	ARRANGEMENT
A	NO FLANGES
B	NO VARIABLE END FLANGE., FIXED END FLANGE WELDED TO END

CHART 3

NOTE - Current Rating - 45 Amps RMS

Note = This Flange Required Only when called for in Part No., as per "B" Type Flange Arrangement

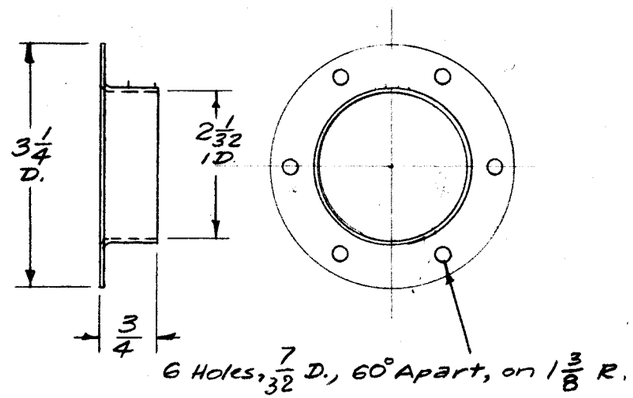

FIXED END FLANGE
Type FM2LL
w/out Locking Device
.062 Copper, Silver Plated

Clockwise Rotation of Shaft Decreases Capacity.

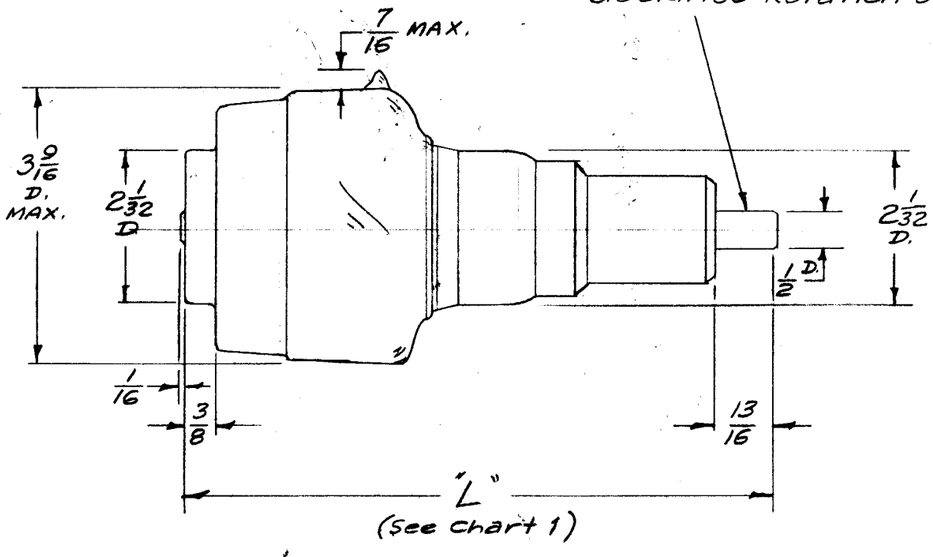

NOTICE TO PERSONS RECEIVING THIS DRAWING

THE TECHNICAL MATERIEL CORPORATION claims proprietary right in the material disclosed hereon. This drawing is issued in confidence for engineering information only and may not be reproduced or used to manufacture anything shown hereon without permission from THE TECHNICAL MATERIEL CORPORATION to the user. This drawing is loaned for mutual assistance and is subject to recall at any time.

Property of:
THE TECHNICAL MATERIEL CORPORATION
MAMARONECK, NEW YORK

TMC PART NO. TO BE IN FOLLOWING FORM:

CB-142 - 500 - 15 A

BASIC TMC PART NO.	MAX. CAPACITANCE DESIRED (IN MMFD.) See CHART # 1 TMC CODE	VOLTAGE DESIRED (IN KV) See CHART 2 TMC CODE	FLANGE ARRANGEMENT DESIRED See CHART 3 TMC CODE

Example: CB-142-250-10A = Capacitor, Variable, Vacuum, 5-250 MMFD., 10 KV, No Flanges.

REF. NOTE -
When this Capacitor requires loose Mtg. Flanges, Use TMC Dwg. No. PO-185-3 for fixed end & PO-185-2 for Variable End.

ISSUE	ITEM	CHANGED FROM	DATE	CH. NO.	DRAFTS	CHECKER	ENG. APP.
C	1	ON Flange, Hole Dim. Was 3/16 TYPE Was FM2B	8-5-61	5378	G.D.L	RU	[illegible]
B	1	"L" Dim for TMC CODE 500 Was 7-3/4	5-15-61	4874	W.A.F.	JCB	[illegible]
A	1	FLANGE CHART CHGD. REF NOTES ADDED	9/18/59	1309	16	[illegible]	[illegible]

TOLERANCES

DEC. DIM. ±
FRAC. DIM. ± 1/32
ANGULAR DIM. ± 1°

SCALE: 5401-48 (UCSF)

MAXIMUM ALLOWABLE TOLERANCES HAVE BEEN DETERMINED AND ANY DEVIATIONS WILL BE CAUSE FOR REJECTION.
REMOVE ALL BURRS AND SHARP EDGES

REQ. PER UNIT	MODEL	PROJECT NO.	ASS'Y. NO.	DATE
	USED ON			

REQ.	ITEM	PART NO.	DESCRIPTION	SYMBOL
			THE TECHNICAL MATERIEL CORP. MAMARONECK, NEW YORK	
		STOCK SIZE	CAPACITOR, VARIABLE, VACUUM	
		MATERIAL		
		TYPE & TEMPER / HEAT TREAT. SPEC.	DRAWN 16 2/27/59 / CHECKED [illegible] / FINAL APPROVAL [illegible]	
		FINISH & SPEC. NO.	ELEC. DES. APP. [illegible] / MECH. DES. APP. [illegible]	CB-142 C