REQ. PER UNIT	USED ON MODEL	ASS'Y. NO.	DATE	CB-138	B

TMC NO.	MFG. NO.	CAP. μμf MAX	CAP. μμf MIN	NO. OF PLATES	SPACE IN.	"L"
CB-138-1	250E20	244	12	23	.045	2-25/32
2	350E20	353	15	33	.045	3-17/32
3	500E20	488	19	45	.045	4 15/32
4	100E30	100	11	15	.075	2 9/16
5	150E30	154	14	23	.075	3 7/16
6	250E30	251	20	37	.075	4 15/16
7	350E30	347	25	51	.075	6 7/16
8	35E45	38	9	9	.125	2 5/16
9	50E45	53	11	12	.125	2 31/32
10	70E45	74	13	17	.125	3 9/16
11	100E45	101	16	23	.125	4 17/32
12	150E45	145	20	33	.125	6 3/32
CB-138-13	250E45	241	32	55	.125	9 9/16

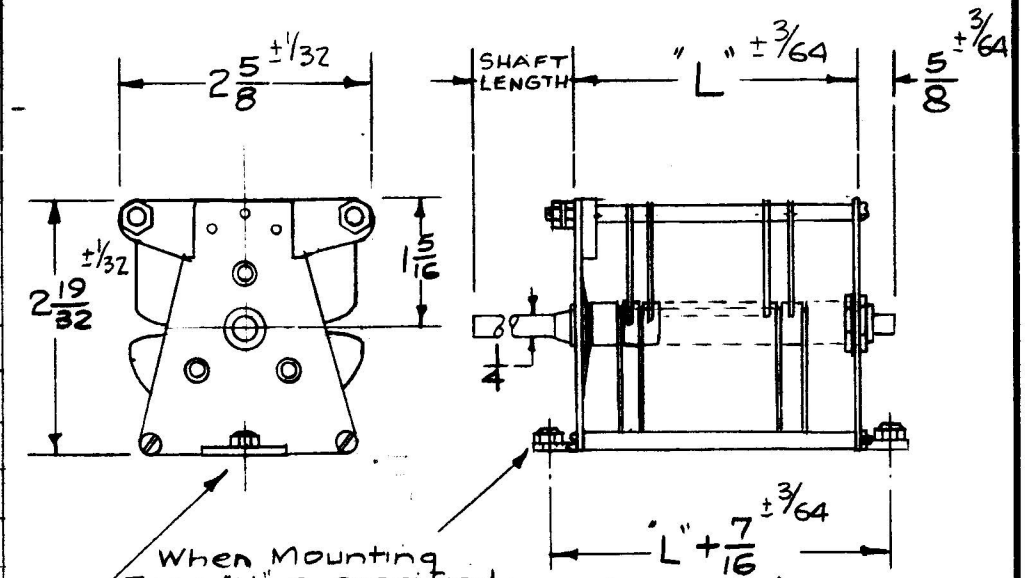

When Mounting Type "N" is specified, Mfg. will supply two nuts Assembled as shown. Nuts must be TMC Type SM-111-D-206 or Equiv.

CODE	SHAFT LENGTH
A	3/4 (RFA-1)
B	1-1/2 (STD.)

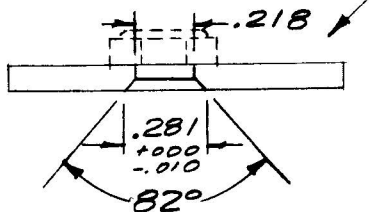

Drilling Plan Required when Mounting Type "N" is Specified.

Type Designation to be as follows:

CB-138-3 A N

TMC DWG NO.

REQ. SHAFT LENGTH CODE (See Chart)

MTG. TYPE
N = with Nuts as Shown
H = with Clearance Holes.

Ref: Johnson Condensor

ISSUE	ITEM	CHANGED FROM	DATE	CH. NO.	DRAFTS	CHECKER	ENG. APP.
B	1	Added Tolerances	2-14-61	4153	DDM	JCB	EPM
A	1	Made into Family (Shaft Lengths & Nuts)	6/9/58	1	16	[illegible]	[illegible]

TOLERANCES

DEC. DIM. ±
FRAC. DIM. ±
ANGULAR DIM. ±

SCALE:

MAXIMUM ALLOWABLE TOLERANCES HAVE BEEN DETERMINED AND ANY DEVIATIONS WILL BE CAUSE FOR REJECTION.
REMOVE ALL BURRS AND SHARP EDGES

REQ.	ITEM	PART NO.	DESCRIPTION	SYMBOL

.032 Thk Plates.

STOCK SIZE

MATERIAL

TYPE & TEMPER | HEAT TREAT. SPEC.

FINISH & SPEC. NO.

THE TECHNICAL MATERIEL CORP.
MAMARONECK, NEW YORK

CAPACITOR, VARIABLE, AIR

DRAWN	CHECKED	FINAL APPROVAL
16 4/17/58	[illegible]	AJJ

ELEC. DES. APP. | MECH. DES. APP.

CB-138 B

FORM-108-A