IF IT IS FOUND DESIRABLE TO CHANGE ANY TOLERANCE OR OTHER DETAIL SPECIFIED ON THIS DRAWING NOTIFY THE PURCHASER PROMPTLY.

MAXIMUM ALLOWABLE TOLERANCES HAVE BEEN DETERMINED AND DEVIATIONS WILL BE CAUSE FOR REJECTION. REMOVE ALL BURRS AND SHARP EDGES

STANDARD DRAWING

CB10004

USED ON			
MODEL	PROJECT NO.	ASS'Y. NO.	DATE
GPT-750		A10208	20/5/60

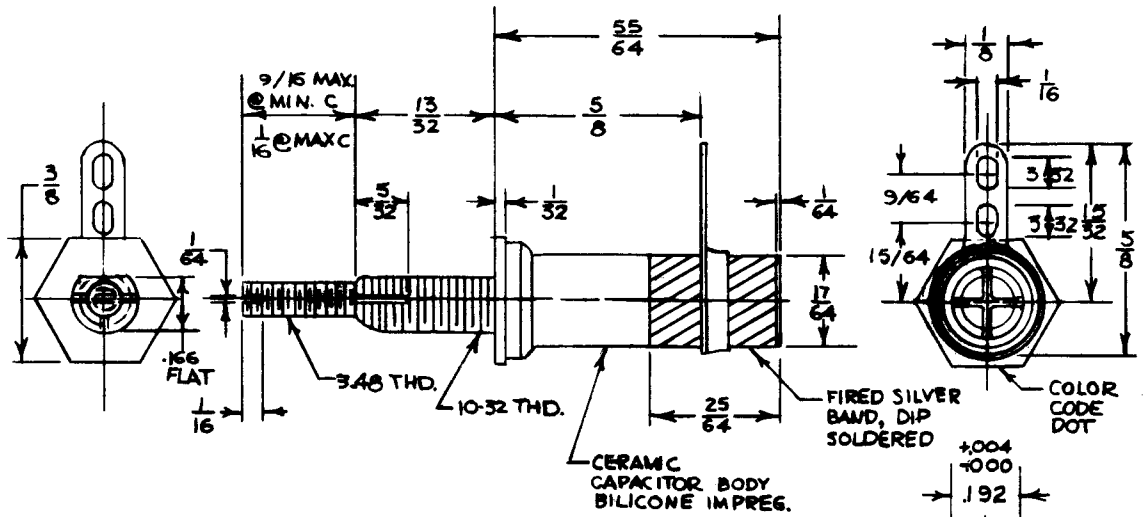

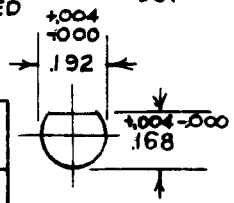

RECOMMENDED "D" PUNCHING FOR MOUNTING

TMC PART NO.	MFR CODE NO.	MFR. PART NO.	CAPACITY RANGE µfds (MIN.)	APPROX. Q	COLOR CODE	TEMP COEFF PPM/°C	DCWV
CB10004-1		CS6-50	3-25	500	black	+50 ±150	500

REQ.	ITEM	PART NO.	DESCRIPTION	SYMBOL

STOCK SIZE

MATERIAL | WEIGHT PER PC.

TYPE & TEMPER

HEAT TREAT. SPEC.

FINISH & SPEC. NO.

TMC (Canada) LIMITED
OTTAWA ONTARIO

CAPACITOR-VARIABLE

DRAWN	ELEC. DES. APP.	MECH. DES. APP.
JPC		R. W. Thomas

CHECKED | FINAL APPROVAL

CB10004

ISSUE	ITEM	CHANGED FROM	DATE	CN. NO.	DRAFTS	CHECKER	ENG. APP.

TOLERANCES

ALL OTHERS: DEC. DIM. ± / FRAC. DIM. ± / ANGULAR DIM. ±

SCALE S10045-9

DIMENSIONS IN INCHES UNLESS OTHERWISE SPECIFIED

DRILL, PUNCH, COMMERCIAL STOCK SIZES AND MANUFACTURERS TOLERANCES ARE NOT INCLUDED.

FORM — 127