REVISIONS							
SYM	ZONE	DESCRIPTION	DATE	E.N.N. NO.	DRAFT.	CHKD	APPD
Ø		ORIGINAL RELEASE FOR PRODUCTION	9/10/70		CW		

Ø

BL134

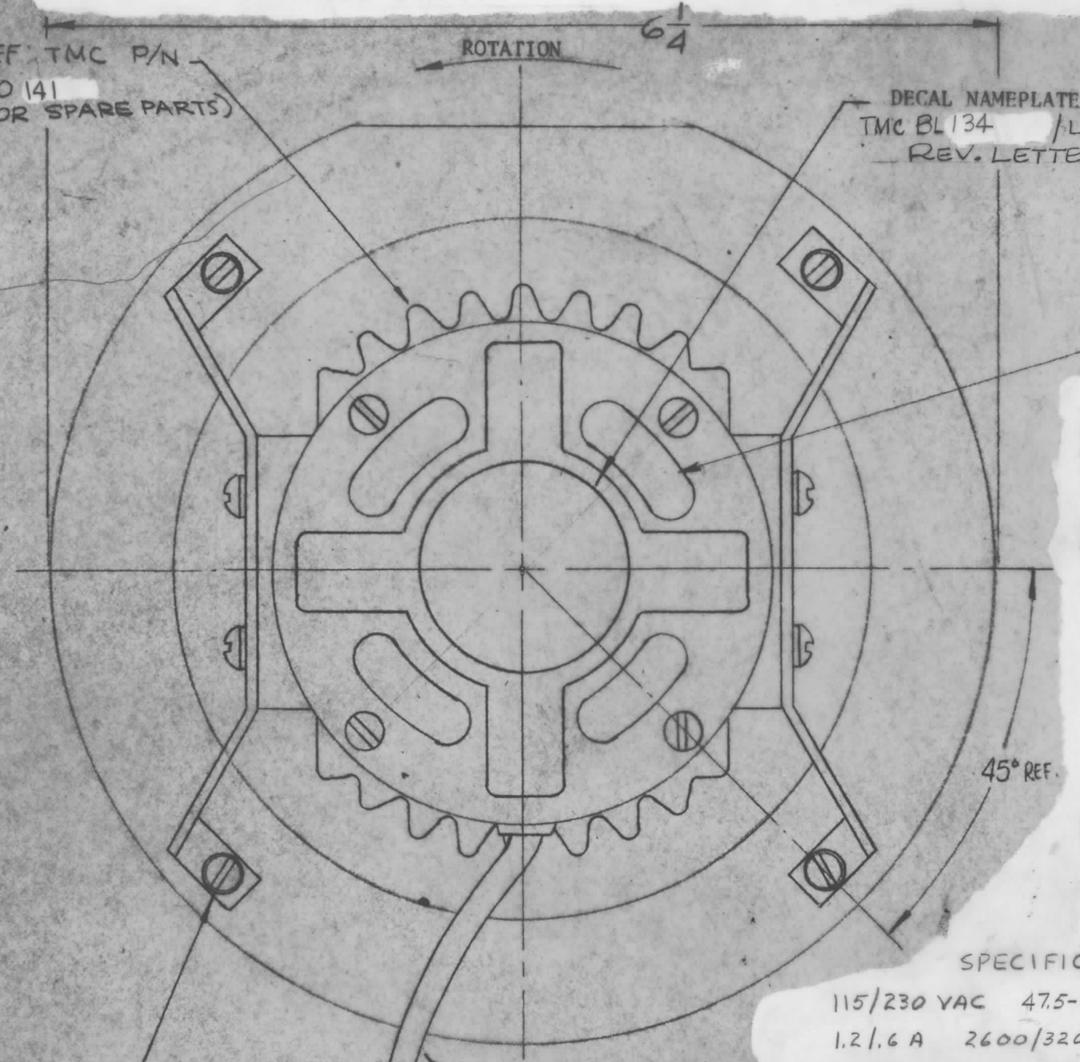

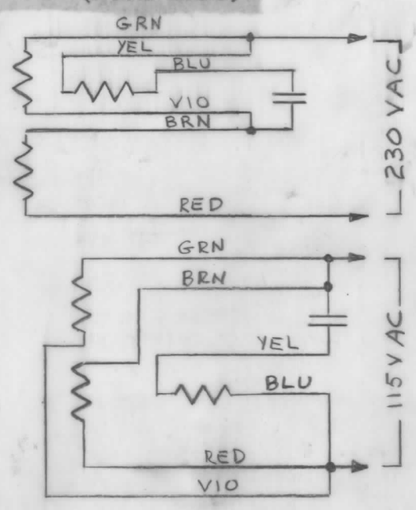

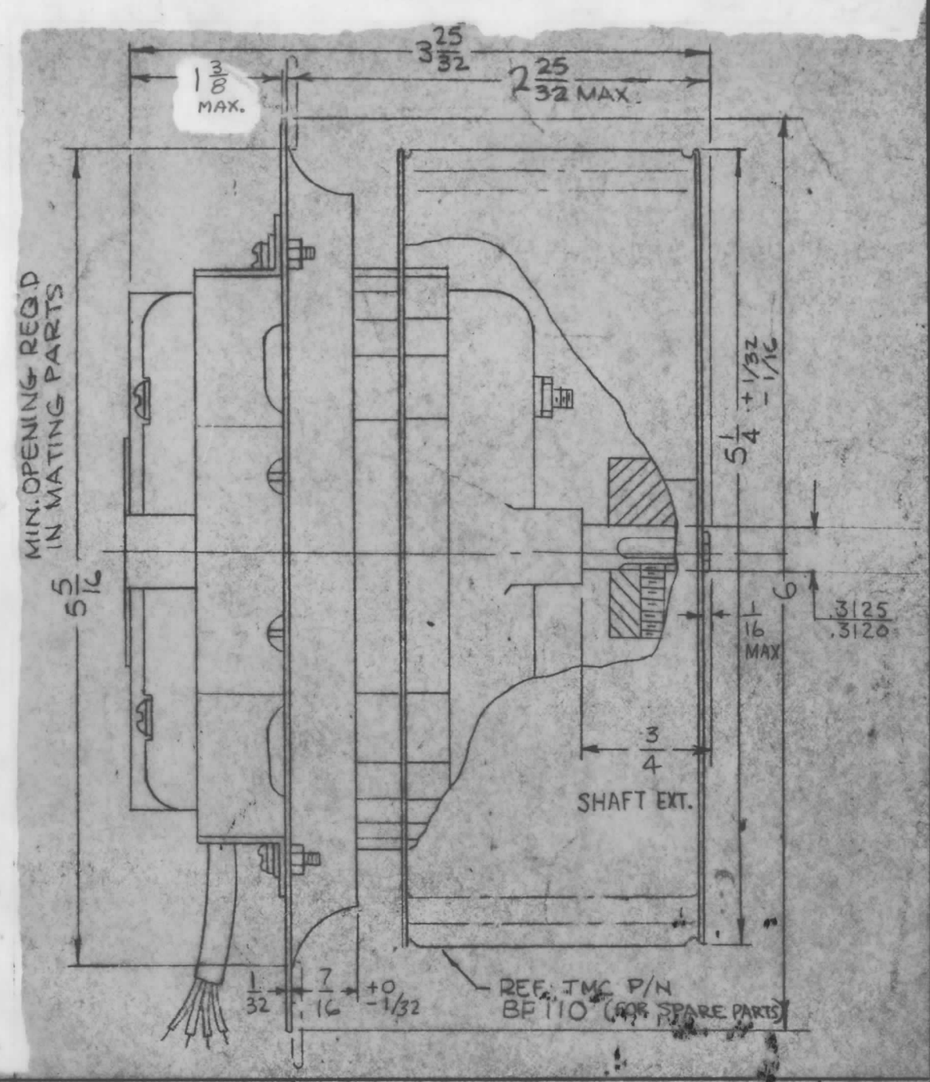

SPECIFICATIONS:

115/230 VAC 47.5-63 Hz 1 PHASE

1.2/.6 A 2600/3200 RPM

4 MFD 220 VAC CAP.

FINISH:

MOTOR - BLACK ANODIZE.

WHEEL & BRKTS - CAD. PLATE & BRONZE IRIDITE.

INLET RING - SEMI-GLOSS BLK ENAMEL.

NOTES

Q'TY./UNIT	MODEL USED ON	ASS'Y. NO.
1	TLAM-1K	

SCALE	CODE	
1:1	C	S401-116 (BC2914B-8) S401-353 (B53A7L-30)

THE CONTENTS OF THIS DRAWING ARE THE EXCLUSIVE PROPERTY OF THE TECHNICAL MATERIEL CORP. ITS UNAUTHORIZED USE OR REPRODUCTION IN WHOLE OR IN PART IS STRICTLY FORBIDDEN.

REQ'D.	ITEM	PART NUMBER	DESCRIPTION	SYMBOL

F. BUDETTI

LIST OF MATERIAL

MATERIAL —

FINISH SEE NOTE

UNLESS OTHERWISE SPECIFIED
DIMENSIONS ARE IN INCHES AND INCLUDE
CHEMICALLY APPLIED OR PLATED FINISHES

TOLERANCES
DECIMALS .X ± .05 .XX ± .01 .XXX ± .005
FRACTIONS ± 1/64
ANGLES ± 0° 30'

THE TECHNICAL MATERIEL CORP.
MAMARONECK, NEW YORK

TITLE BLOWER, CENTRIFUGAL

DRAWN	16JUL70	FINAL APPROVAL	9/10/70
CHECKED			
ELECT. DES.	3SEP70	BL 134	Ø
MECH. DES.		SHEET	REV. LTR.

TMC FORM 109

REPROVEL NO. 440H