M	TMC PART NO.	TMC CONTROL NO	MFRS. CODE	MFRS. PART NO.
	BL102-1	BL102XX116	S401-116	BC2210B

BL 102

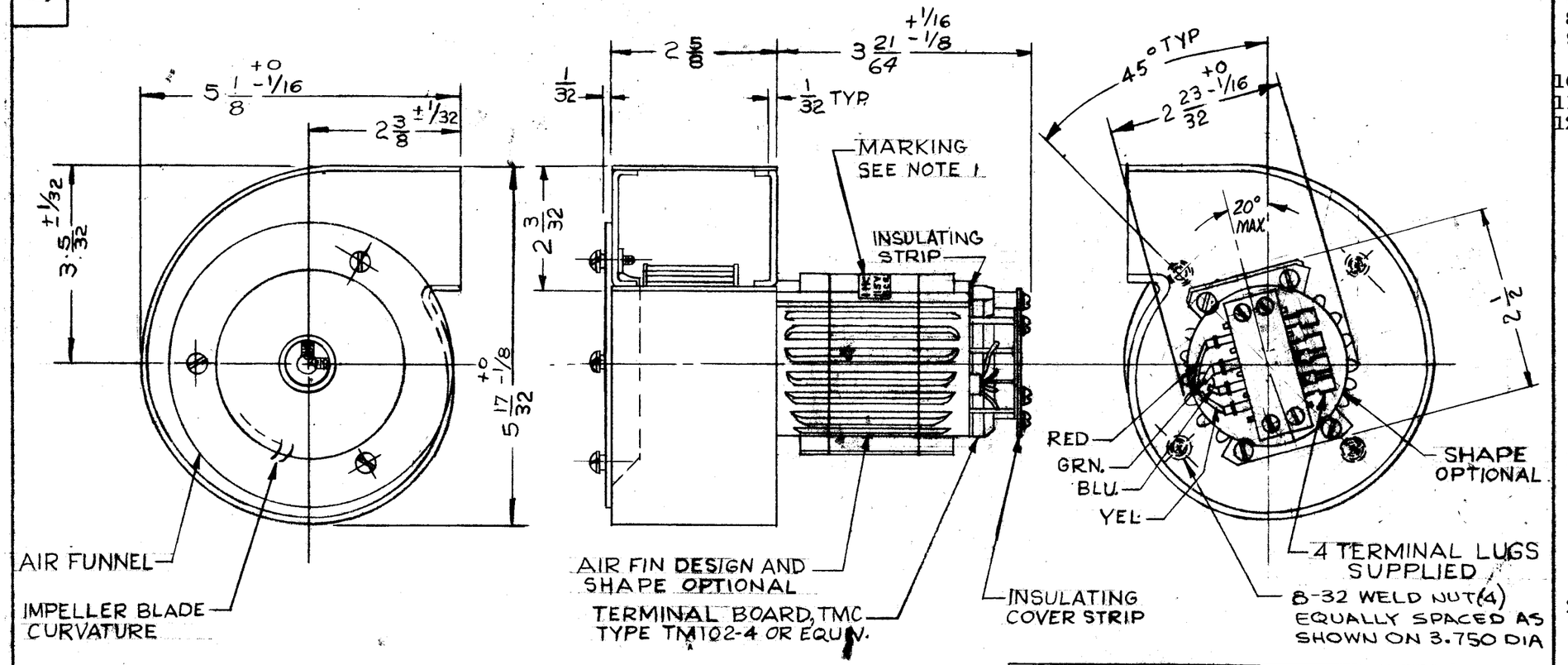

SPECIFICATIONS

1. ROTATION: CCW AS VIEWED FROM MOTOR END.
2. VOLTAGE: 115
3. PHASE: SINGLE
4. FREQUENCY: 50/60 HZ
5. NOMINAL RPM: 3400
6. RUNNING CAPACITOR: 1 μF, 220 VAC
7. FULL LOAD WATTS: 39
8. FREE AIR DELIVERY: 86 CFM AT 60 HZ
9. MAX. S.P. AT NO DELIVERY: .75 INCHES OF H20
10. AMBIENT TEMP.: 70°C
11. NET WEIGHT: 3-3/4 LBS. (APPROX.)
12. MECHANICAL DATA:
    - A. DIRECT DRIVE
    - B. IMPELLER:
      - MATERIAL: STEEL
      - FINISH: CADMIUM PLATE AND IRIDITE.
    - C. MOTOR:
      - MATERIAL: CAST ALUMINUM
      - FINISH: BLACK ANODIZE
    - D. HOUSING:
      - CONSTRUCTION: FABRICATED
      - MATERIAL: STEEL
      - FINISH: BLACK SEMI-GLOSS ENAMEL

NOTES

1. MARKING TO BE CONTAINED ON DECAL. MANUFACTURER SHALL MARK ITEM WITH APPROPRIATE TMC CONTROL NO. CONTAINING HIS ASSIGNED CODE AS SHOWN IN CHART, AND SPECIFICATION NUMBERS 2,3,4,5,6. CHARACTERS SHALL BE APPROX. 3/32 HIGH GOTHIC.
2. FOR SPARE PARTS REPLACEMENT OF REPAIRABLE PARTS, SEE TMC LIST ERPL-BL102.

CAUTION: MOTOR AND IMPELLER SHOULD NOT BE REPLACED INDIVIDUALLY UNLESS THEY ARE PROPERLY BALANCED WITH THE ASSOCIATED ASSEMBLY IN WHICH THEY WILL BE INSTALLED.

DATA TABLE

V	Hz	RPM	CURRENT	WATTAGE
115	60	3360	.28 AMP	33 WATT
115	50	2780	.38 AMP	36 WATT

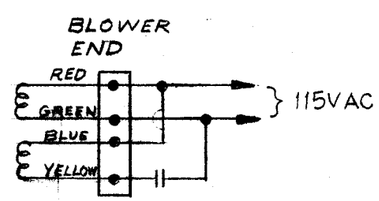

WIRING DIAGRAM

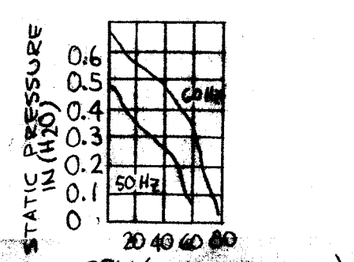

ISSUE	ITEM	CHANGED FROM	DATE	CH. NO.	DRAFTS	CHECKER	ENG. APP
M		ADD 20° MAX X.	3-29-67	18034	L.A.K.		
L		GRAPH ADDED DATA TABLE ADDED	11.18.66	17272	WHW		
K	1	COMPLETELY REVISED	6/9/64	11578	A.M.		
J	1	PROJ NO & INSULATING STRIP ADDED. 3 21/64 DIM WAS 3 5/16	8-29-63	9862	A.K.		
H	1	MOTOR END REDRAWN AS PER MFG'S DWG BC2210B	8-15-62	7064	E.S.		
G	1	SPEC. ADDED	9-30-60	3111	CM		
F	1	REDRAWN AS PER MFGR. DWG. BC16 21B-1	9-2-60	290,	RU.		

TOLERANCES

DEC. DIM. ±
FRAC. DIM. ±
ANGULAR DIM. ±

SCALE: —//—

MAXIMUM ALLOWABLE TOLERANCES HAVE BEEN DETERMINED AND ANY DEVIATIONS WILL BE CAUSE FOR REJECTION. REMOVE ALL BURRS AND SHARP EDGES

REQ. PER UNIT	MODEL	PROJECT NO.	ASS'Y. NO.	DATE
1	RTF-2/PA			9-2-60

USED ON

REQ.	ITEM	PART NO.	DESCRIPTION	SYMBOL
		—//—		

STOCK SIZE: —//—

MATERIAL: —//— —//—

TYPE & TEMPER: SEE NOTE

HEAT TREAT. SPEC.

FINISH & SPEC. NO.

THE TECHNICAL MATERIEL CORP.
MAMARONECK, NEW YORK

FAN, CENTRIFUGAL

DRAWN: RU220 9-1-60

CHECKED: J C Bile

FINAL APPROVAL

ELEC. DES. APP.

MECH. DES. APP.

BL 102 M

FORM 109-A