THE CONTENTS OF THIS DRAWING ARE THE EXCLUSIVE PROPERTY OF THE TECHNICAL MATERIEL CORP. ITS UNAUTHORIZED USE OR REPRODUCTION IN WHOLE OR IN PART IS STRICTLY FORBIDDEN.

AX-416

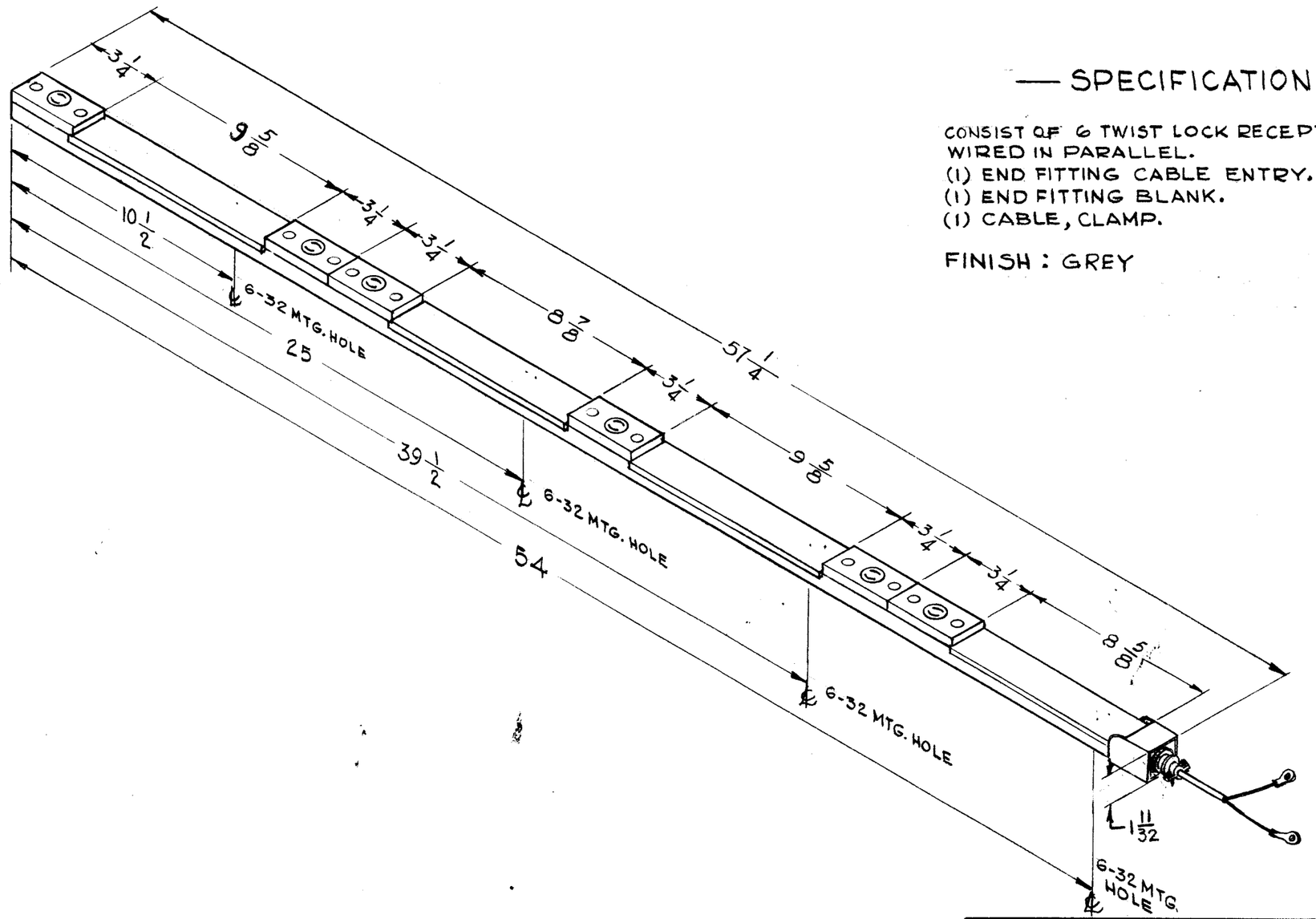

— SPECIFICATION —

CONSIST OF 6 TWIST LOCK RECEPTACLE FEMALE, WIRED IN PARALLEL.
(1) END FITTING CABLE ENTRY.
(1) END FITTING BLANK.
(1) CABLE, CLAMP.

FINISH : GREY

REQ.	ITEM	PART NO.	STRUMER DESCRIPTION	SYMBOL
			THE TECHNICAL MATERIEL CORP. MAMARONECK, NEW YORK	
STOCK SIZE			A. C. POWER STRIP	
MATERIAL				
TYPE & TEMPER	HEAT TREAT. SPEC.		G.D.L / 3/15/63	
			DRAWN / CHECKED	FINAL APPROVAL
FINISH & SPEC. NO.			ELEC. DES. APP. / MECH. DES. APP.	AX-416

SYM	DESCRIPTION	DATE	CH. NO.	DRAFTS	CHECKER	ENG. APP.

UNLESS OTHERWISE SPECIFIED:
DIMENSIONS ARE IN INCHES
TOLERANCES ON
FRACTIONS ± 1/64 DECIMALS ± .005 ANGLES ± 1/2°

SCALE: 2A - 3114

MAXIMUM ALLOWABLE TOLERANCES HAVE BEEN DETERMINED AND ANY DEVIATIONS WILL BE CAUSE FOR REJECTION.
REMOVE ALL BURRS AND SHARP EDGES

REQ. PER UNIT	MODEL	SECTION	ASS'Y. NO.	DATE
1	RAK-30-A		A-3137	2-22-63

USED ON

TMC FORM NO. 109

DEFIANCE NO. 1020 36845