AX-174

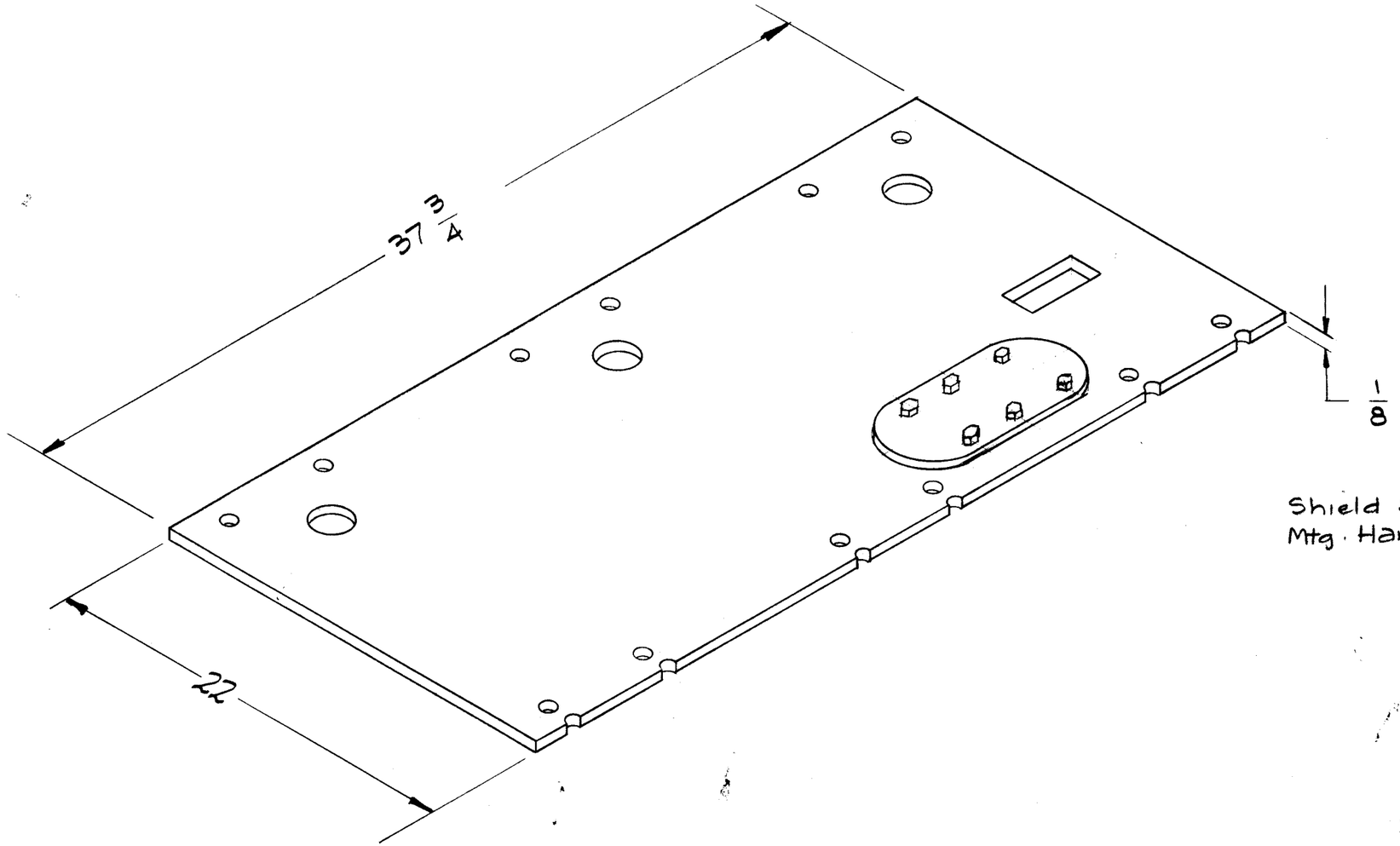

Shield & Access Cover- Aluminum, Iridite
Mtg. Hardware- Stainless Steel

ISSUE	ITEM	CHANGED FROM	DATE	CH. NO.	DRAFTS	CHECKER	ENG. APP.

TOLERANCES

DEC. DIM. ±
FRAC. DIM. ±
ANGULAR DIM. ±

SCALE: NPL

2A-1748

MAXIMUM ALLOWABLE TOLERANCES HAVE BEEN DETERMINED AND ANY DEVIATIONS WILL BE CAUSE FOR REJECTION.
REMOVE ALL BURRS AND SHARP EDGES

REQ. PER UNIT	MODEL	PROJECT NO.	ASS'Y. NO.	DATE
1	GPT-10 K			11-11-59

USED ON

REQ.	ITEM	PART NO.	DESCRIPTION	SYMBOL

STOCK SIZE

MATERIAL

TYPE & TEMPER | HEAT TREAT. SPEC.

FINISH & SPEC. NO.

THE TECHNICAL MATERIEL CORP.
MAMARONECK, NEW YORK

BASE SHIELD ASS'Y,
AUX. FRAME

DRAWN	CHECKED	FINAL APPROVAL
JeBribbo 11-11-59		
ELEC. DES. APP.	MECH. DES. APP.	AX-174

FORM 109-A