AS-121

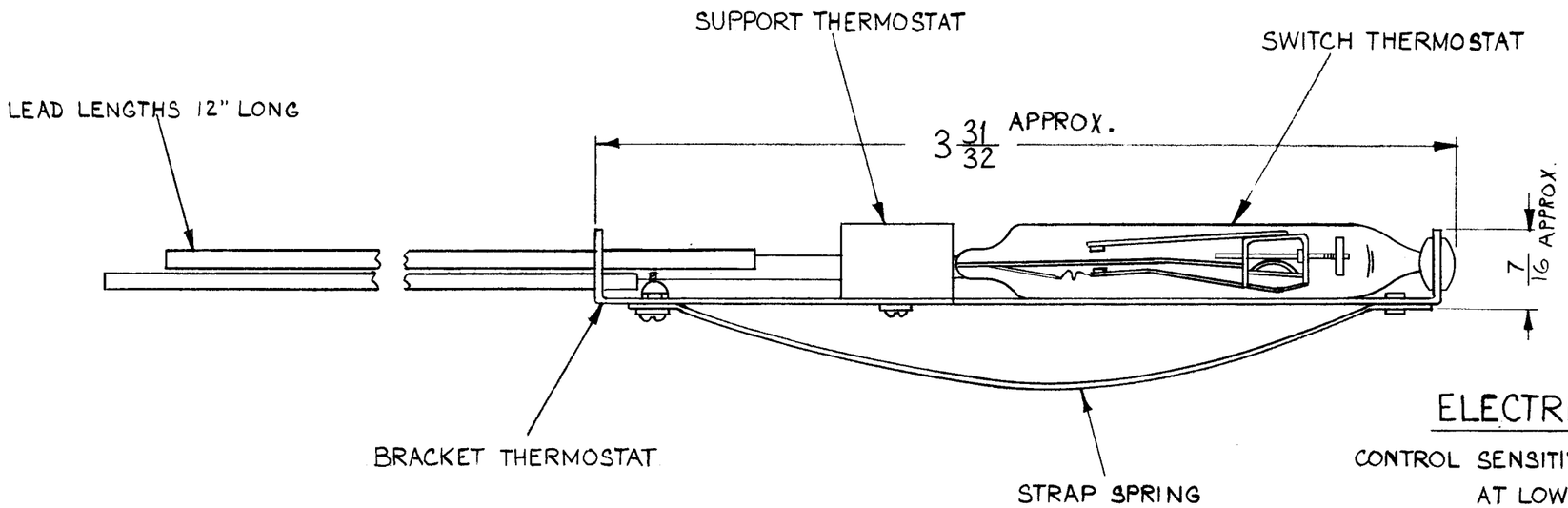

ELECTRICAL SPECIFICATIONS

CONTROL SENSITIVITY ~ WILL HOLD TEMP. WITHIN ± 0.5 °C AT LOW CONTACT LOAD WHEN PROPERLY APPLIED.

MAX. LOAD ~ 1.0 AMPERE.

MAX. VOLTAGE ~ 250 AC OR DC.

MAX. TEMP. ~ 150 °C SUBMERSION MEDIUM ~ AIR.

SYM	DESCRIPTION	DATE	CH. NO.	DRAFTS	CHECKER	ENG. APP.

UNLESS OTHERWISE SPECIFIED:

DIMENSIONS ARE IN INCHES

TOLERANCES ON

FRACTIONS ± 1/64 DECIMALS ± .005 ANGLES ± 1/2°

SCALE: DO NOT SCALE (2A-3006)

MAXIMUM ALLOWABLE TOLERANCES HAVE BEEN DETERMINED AND ANY DEVIATIONS WILL BE CAUSE FOR REJECTION. REMOVE ALL BURRS AND SHARP EDGES

REQ. PER UNIT	MODEL	SECTION	ASS'Y. NO.	DATE
1	CHG-2	OVEN		6-6-61

USED ON

REQ.	ITEM	PART NO.	DESCRIPTION	SYMBOL

STOCK SIZE

MATERIAL

TYPE & TEMPER | HEAT TREAT. SPEC.

FINISH & SPEC. NO.

THE TECHNICAL MATERIEL CORP.
MAMARONECK, NEW YORK

THERMOSTAT SWITCH ASS'Y.

DRAWN	CHECKER	FINAL APPROVAL
W.O.F.	JCB	
S.D.		AS-121

ELEC. DES. APP. | MECH. DES. APP.

TMC FORM NO. 109

DEFIANCE NO. 1020 36852