A

AS-107 PAGE 2 of 2

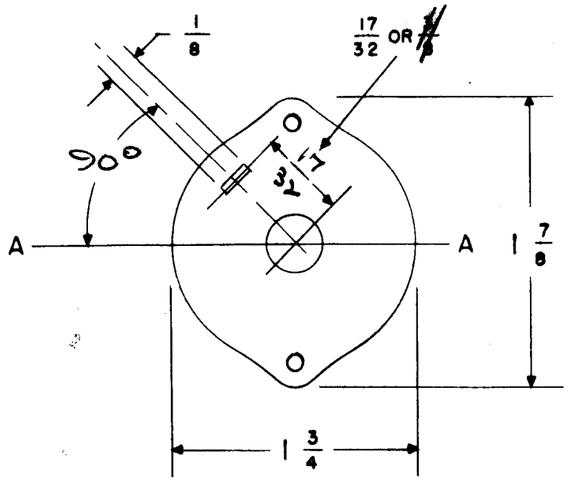


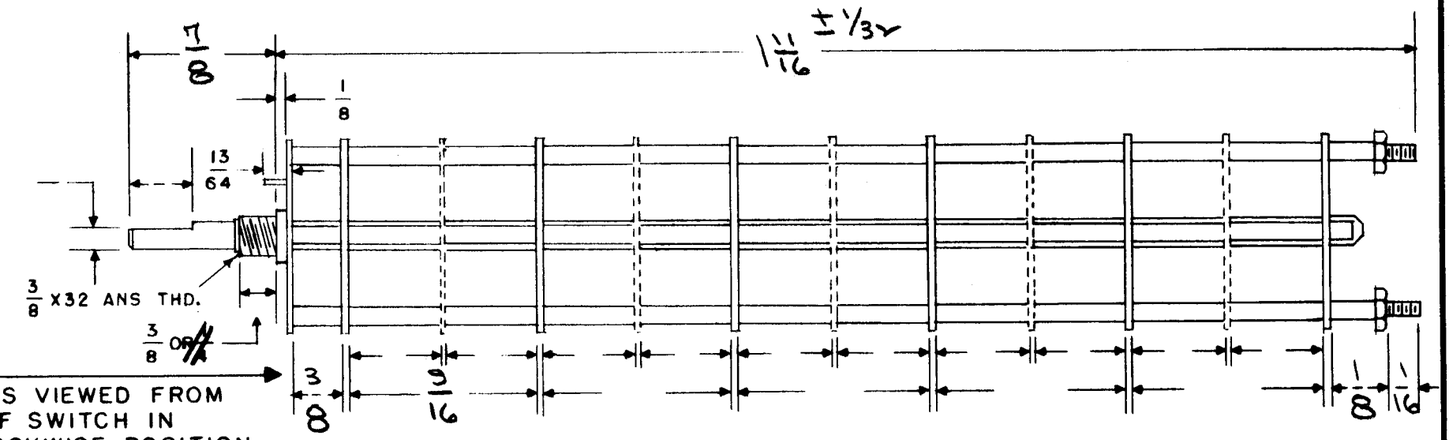


FRONT & REAR SECTIONS VIEWED FROM FRONT OR KNOB END OF SWITCH IN EXTREME COUNTER CLOCKWISE POSITION

DRAW IN FLAT ON ABOVE SHAFT IN EXTREME COUNTER CLOCKWISE POSITION AND SHOW ANGLE IN REFERENCE TO LINE A-A

NUMBER OF SECTIONS 2
NUMBER OF POSITIONS 5
ANGLE OF THROW 60° (30° OR 60°)

PART NUMBER _____
STAMP ON FRONT PLATE YES ___ NO ___

CONTACTS & ROTORS: (IF NOT SPECIFIED, SHORTING TYPE WILL BE SUPPLIED)
SHORTING ___ NON SHORTING ___

MATERIAL: (IF NOT SPECIFIED, SILVER PLATED BRASS WILL BE SUPPLIED)
SILVER PLATED BRASS ✓ SILVER ALLOY ___

INSULATION: BAKELITE ___ CERAMIC ✓
SPECIFY IMPREGNATION IF REQUIRED _____

FINISH REQUIREMENTS: COMMERCIAL ✓ ARMY ___ NAVY ___
SALT TEST (IF ANY GIVE DETAILS) _____

HARDWARE: SUPPLY
1 3/8-32 NUTS 1/2 ACROS FLATS MAT. Brass PLATING Nickel
1 3/8 INT TOOTH LOCKWASHERS MAT. " PLATING "

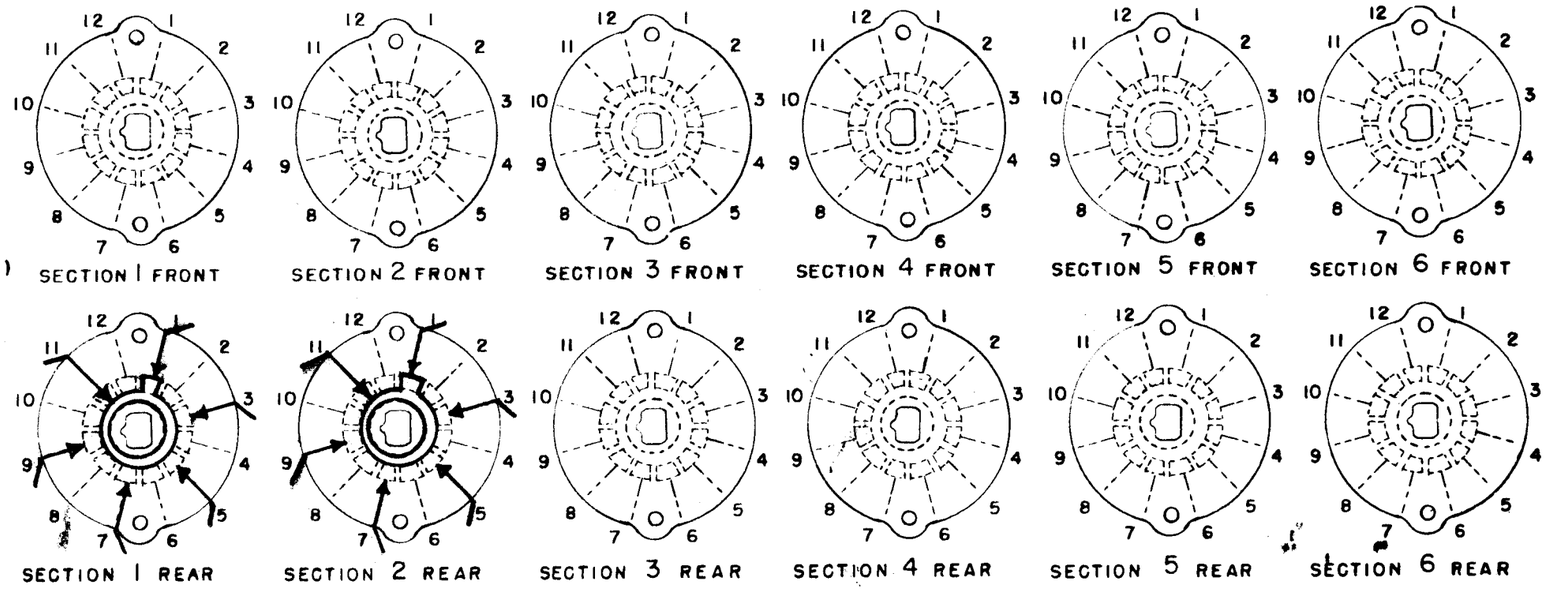


SYMBOLS USED IN MARKING PRINT

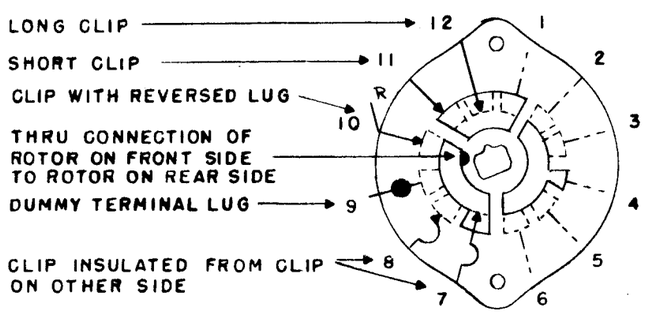


OUTLINE ROTOR BLADES AS SHOWN ABOVE WITH SWITCH IN EXTREME COUNTER-CLOCKWISE POSITION

SWITCH
TYPE - H HC DH DHC QH
QDH QHC QDHC
(CIRCLE DESIRED TYPE)

| ISSUE | ITEM | CHANGED FROM | DATE | CH. NO. | DRAFTS | CHECKER | ENG. APP. |
|---|---|---|---|---|---|---|---|
| A | | SEE SHEET 1 | 3-29-67 | 18056 | L.A.K. | | |

TOLERANCES
DEC. DIM. ±
FRAC. DIM. ±
ANGULAR DIM. ±

SCALE: ESW 232

MAXIMUM ALLOWABLE TOLERANCES HAVE BEEN DETERMINED AND ANY DEVIATIONS WILL BE CAUSE FOR REJECTION. REMOVE ALL BURRS AND SHARP EDGES

| REQ. PER UNIT | MODEL | PROJECT NO. | ASS'Y. NO. | DATE |
|---|---|---|---|---|
| | RTF-2 Mult. | | | |

USED ON

| REQ. | ITEM | PART NO. | DESCRIPTION | SYMBOL |
|---|---|---|---|---|
| | | | THE TECHNICAL MATERIEL CORP. MAMARONECK, NEW YORK | |
| STOCK SIZE | | | SWITCH ASSY, ROTARY (S203) | |
| MATERIAL | | | C.D.D. | |
| TYPE & TEMPER | HEAT TREAT. SPEC. | DRAWN | CHECKED | FINAL APPROVAL |
| FINISH & SPEC. NO. | | | | AS-107 |