REQ. PER UNIT	USED ON MODEL	ASS'Y. NO.	DATE		
	TTR-10(V)		9-25-63	AP-114	A

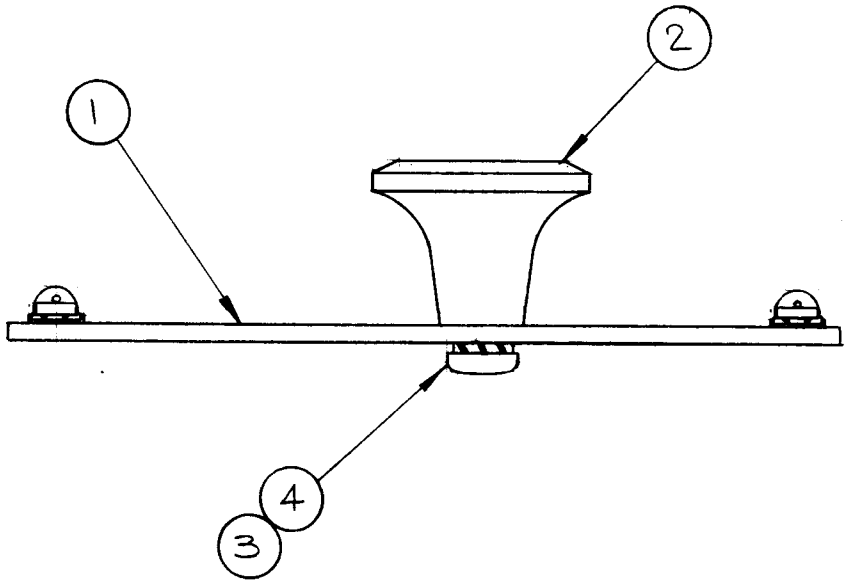

REQ.	ITEM	PART NO.	DESCRIPTION	SYMBOL
1	4	LWI 08MRN	WASHER, LOCK, INT.	
1	3	SC143-0832B8	SCREW, MACHINE-NYLON	
1	2	MP-126-1	KNOB	
1	1	MS-3489	PANEL, BLANK	

KOHN

SYM	DESCRIPTION	DATE	CH. NO.	DRAFTS	CHECKER	ENG. APP.
A	IT.4 WAS LWE08MRN IT.3 WAS SCBP0832BN6	11.4.64	12844	JRB	@	

UNLESS OTHERWISE SPECIFIED
DIMENSIONS ARE IN INCHES AND INCLUDE
CHEMICALLY APPLIED OR PLATED FINISHES

SCALE 1:1

TOLERANCES
DECIMALS .X ±.05 .XX ± .01 .XXX ±.005
FRACTIONS ± 1/64
ANGLES ± 0° 30'

CODE A

STOCK SIZE: ~

MATERIAL: ~

TYPE & TEMPER: ~ HEAT TREAT. SPEC.: ~

FINISH & SPEC. NO.: ~

THE TECHNICAL MATERIEL CORP.
MAMARONECK. NEW YORK

PANEL ASSEMBLY, BLANK
TRANSMITTER

DRAWN	CHECKED	FINAL APPROVAL
R. Chenault 9-25-63	10/9/63	BP
R. KOHN 2 OCT. '63	RON KOHN 2 OCT. '63	
ELEC. DES. APP.	MECH. DES. APP.	

AP-114 A

TMC FORM 108-A