IF IT IS FOUND DESIRABLE TO CHANGE ANY TOLERANCE OR OTHER DETAIL SPECIFIED ON THIS DRAWING NOTIFY THE PURCHASER PROMPTLY.

MAXIMUM ALLOWABLE TOLERANCES HAVE BEEN DETERMINED AND DEVIATIONS WILL BE CAUSE FOR REJECTION. REMOVE ALL BURRS AND SHARP EDGES

A-849 B

REQ. PER UNIT	USED ON MODEL	PROJECT NO.	ASS'Y. NO.	DATE
1	RAC		A-101	10/11/54
1	BAC-1			10/25/54
1	RAC-10		A-745	11-26-54
1	RAC-12		A-990	4-4-55
1	RAC-2		A-570	12-21-55
1	RAC-3		A-1463	10-13-57

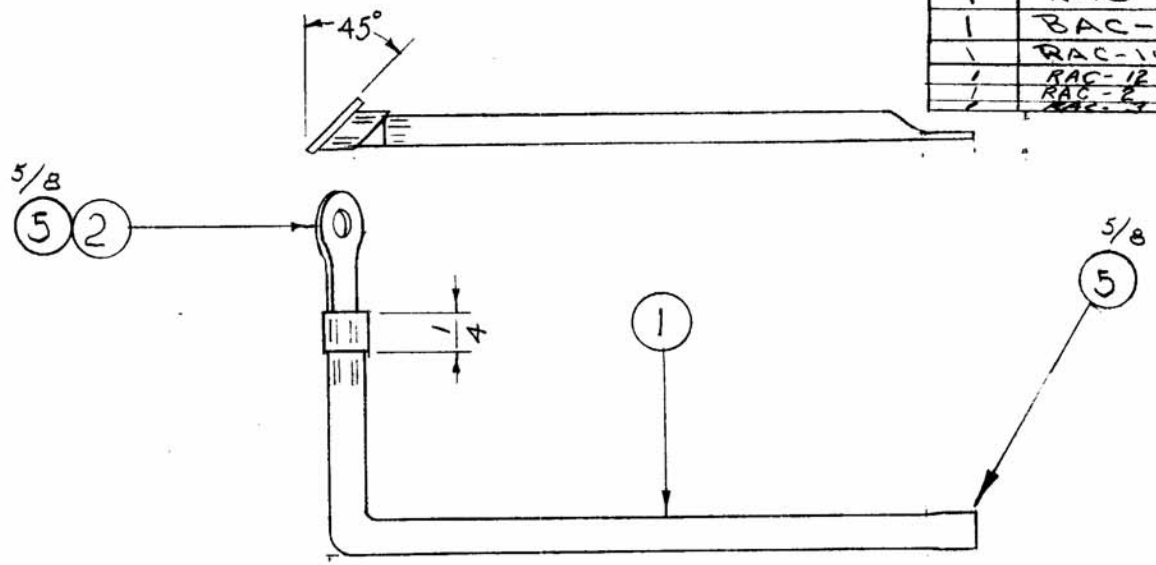

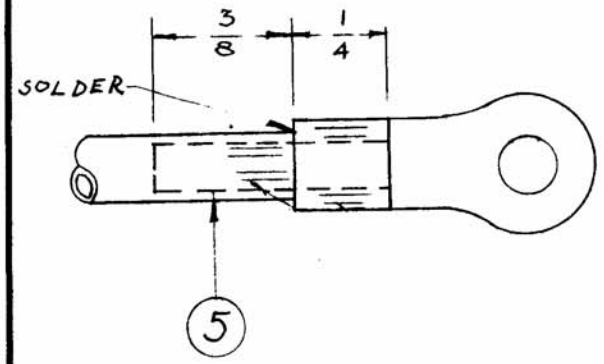

REQ.	ITEM	PART NO.	DESCRIPTION	SYMBOL
5/8	5	WL-100-1	WIRE BUSS BAR	
X	4	BS-100	SOLDER, SOFT	
-		DELETED		
1	2	TE-141-4	LUG, TERMINAL	
1	1	FP-131	CONNECTOR	

STOCK SIZE: —//—

MATERIAL: —//— WEIGHT PER PC.: —//—

TYPE & TEMPER: —//—

HEAT TREAT. SPEC.: —//—

FINISH & SPEC. NO.: SILVER PLATE - S245; CLEAR IRIDITE - S423

THE TECHNICAL MATERIEL CORP.
MAMARONECK. NEW YORK

CONNECTOR INSULATOR LEFT

ISSUE	ITEM	CHANGED FROM	DATE	CN. NO.	DRAFTS	CHECKER	ENG. APP.
B	1	FINISH WAS S105	9.28.66	16895	HLA	JCB	[illegible]
A	1	TE-143 DELETED	5.10.57	1	SC.	JAWe	[illegible]

DRAWN	ELEC. DES. APP.	MECH. DES. APP.
P.B-10-11-54	APB	[illegible]

CHECKED	FINAL APPROVAL
JAWe	APB

TOLERANCES

ALL OTHERS: DEC. DIM. ± ; FRAC. DIM. ± 1/64 ; ANULAR DIM. ±

SCALE: DRILL, PUNCH, COMMERCIAL STOCK SIZES AND MANUFACTURERS TOLERANCES ARE NOT INCLUDED.

A-849 B

FORM — 108