HOLE	DIAMETER	REQ.
A	.116	10
B	.189	2
C	.070	8
D	.081	7

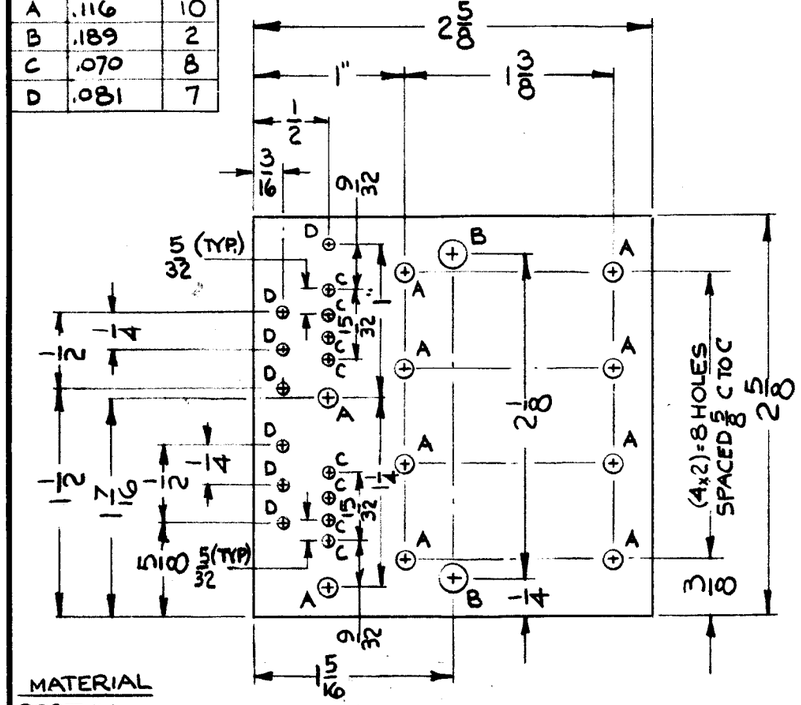

MATERIAL
.093THK.
G10 EPOXY GLASS

A4471-1 MACHINING

MARKING PROCESS:
AS PER TMC SPECIFICATION S-727.
LETTERING:
1/8 HIGH BLACK GOTHIC
LOCATED AS SHOWN.

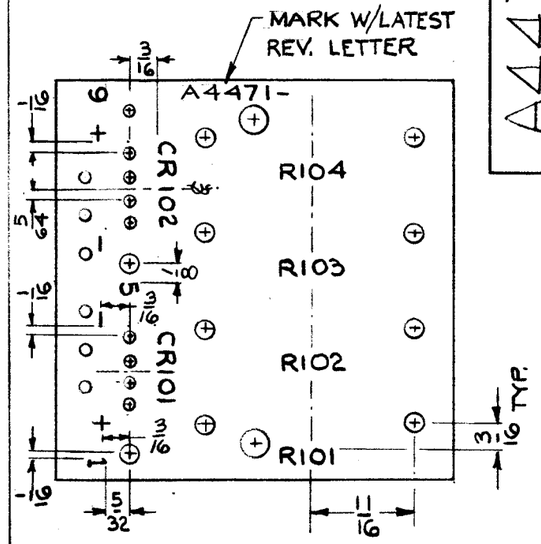

A4471-2 MARKING

Ø

A4471

REVISIONS

SYM	DESCRIPTION	DATE	E.M.N. NO.	DRAFT	CHKD	APPD
X1	DWG NO WAS MS4988, TMC NO. ADDED	7-7-66	—	JC		
X2	ADDED PT. NO'S TO ITEMS 10 & 11	7/27/66		JL		
Ø	ORIGINAL RELEASE FOR PRODUCTION	9.12.66	—	WHO		

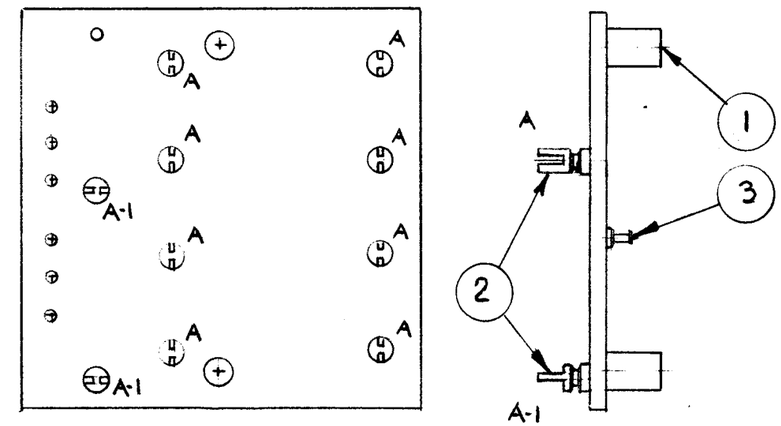

A4471-3 SUB-ASS'Y

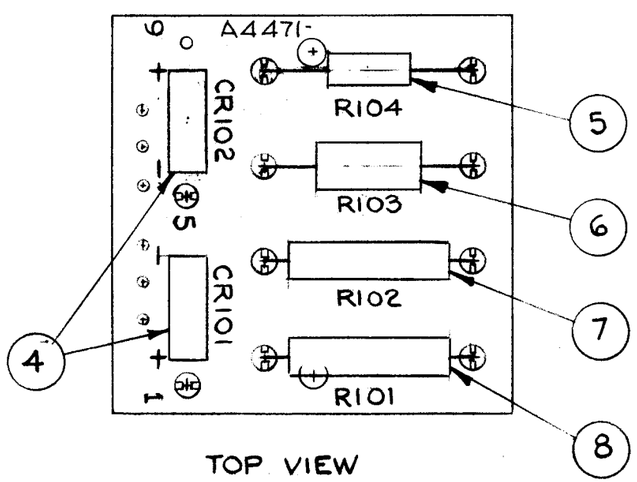

TOP VIEW

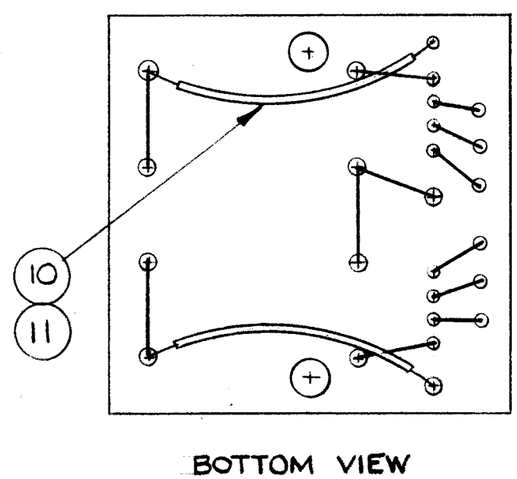

BOTTOM VIEW

A4471-4 FINAL ASS'Y

REQ'D.	ITEM	PART NUMBER	DESCRIPTION	SYMBOL
X	11	PX 104-1-034	INSULATED SLEEVING	
X	10	WL100-7	WIRE, ELECT. BUSS	
X	9	BS100	SOLDER TIN ALLOY	
1	8	RR 114-3W	RESISTOR 3Ω-5W	R101
1	7	RR 114-500W	RESISTOR 500Ω-5W	R102
1	6	RC 42 GF 332 J	RESISTOR 3.3KΩ-2W	R103
1	5	RC 32 GF 560 J	RESISTOR 56Ω-1W	R104
2	4	DD130-200-1.5	DIODE BRIDGE	CR101/CR102
7	3	TE-127-3	TERMINAL, STUD	D
10	2	TE-109-2	SPLIT TERMINAL LUG	A
2	1	TE-108-13	STANDOFF SPACER, SWAGE	B

EATON — LIST OF MATERIAL

Q'T'Y./UNIT	MODEL USED ON	ASS'Y. NO.
1	LSCA-1	A5474

SCALE | CODE

THE CONTENTS OF THIS DRAWING ARE THE EXCLUSIVE PROPERTY OF THE TECHNICAL MATERIEL CORP. ITS UNAUTHORIZED USE OR REPRODUCTION IN WHOLE OR IN PART IS STRICTLY FORBIDDEN.

NOTES

MATERIAL: SEE DWG.

FINISH

UNLESS OTHERWISE SPECIFIED
DIMENSIONS ARE IN INCHES AND INCLUDE CHEMICALLY APPLIED OR PLATED FINISHES

TOLERANCES
DECIMALS: .X ± .05, .XX ± .01, .XXX ± .005
FRACTIONS: ± 1/64
ANGLES: ± 0° 30'

THE TECHNICAL MATERIEL CORP.
MAMARONECK, NEW YORK

TITLE: BOARD, POWER

DRAWN	DATE	FINAL APPROVAL	DATE 9/9/66
CHECKED	DATE		
ELECT. DES.	DATE	A4471	Ø
MECH. DES.	DATE 9/9/66	SHEET	REV. LTR.

M/L QR.

TMC FORM 109 — REPROVEL NO. 440H — 23658