TEST FREQ.	INDUCTANCE	"Q"	BAND	NO. CODE	SYMBOL	EXT. CAP. Q METER	IND. 10K.C. BRIDGE
100KC	165 MMfd	280		3	T1	10,000MMfd	250 uh

Ø

A3827

REVISIONS

SYM	DESCRIPTION	DATE	E.M.N. NO.	DRAFT	CHKD	APPD
X	EXPERIMENTAL RELEASE	7-29-64	X	SRG		
Ø	ORIGINAL RELEASE FOR PRODUCTION	9-23-64	Ø			

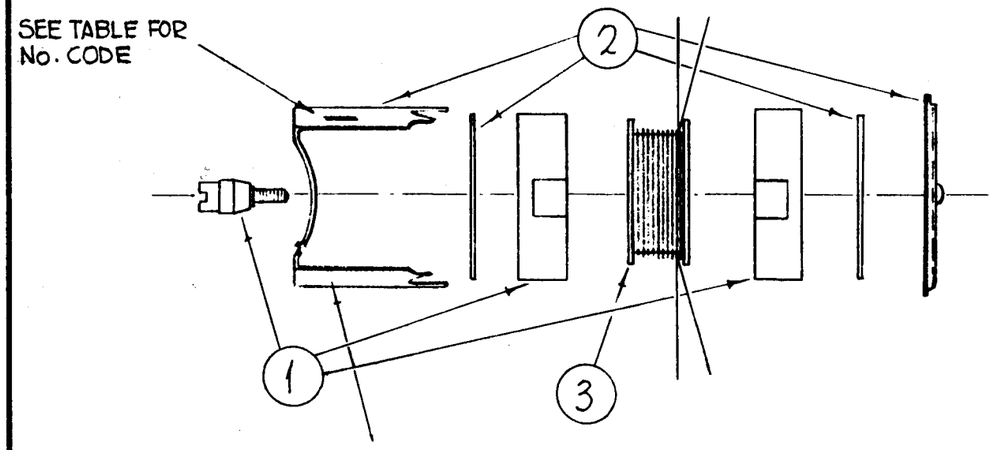

STAMP TMC NO. 3/32 HIGH BLACK GOTHIC W/LATEST REVISION LETTER

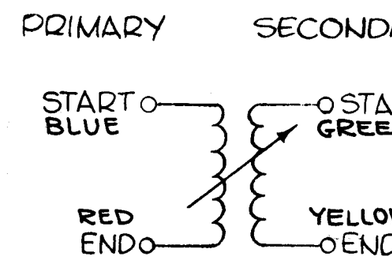

SCHEMATIC, DIAGRAM

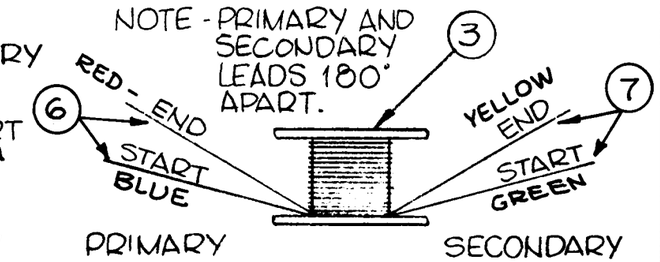

WIRING DETAIL

1. PRIMARY WIND 39 TURNS OF ITEM 6 ON ITEM 3 STAKE WITH ITEM 5.
2. SECONDARY WIND 1 TURNS OF ITEM 7 OVER PRIMARY AND IN THE SAME DIRECTION, STAKE WITH ITEM 5.
3. SECONDARY WINDING MUST BREAK OUT FROM OPPOSITE SIDE OF PRIMARY.
4. KEEP ALL LEADS 1 1/2" LONG.
5. STRIP AND TIN ALL LEADS TO WITHIN 3/4" OF COIL.
6. COLOR CODE ALL LEADS AS SHOWN IN WIRING DETAIL.
7. BAKE COIL FOR 15 MIN. AT 150°F REMOVE FROM OVEN AND COAT COIL WITH ITEM #4.
8. PLACE ITEM 3 INSIDE OF ITEM 1 AND ASSEMBLE AS PER ASSEMBLY DRAWING.
9. BEND THE FOUR SMALL TABS DOWN..
10. NO. CODE THE COIL ON THE SIDE AS SHOWN.
11. STAMP TMC PART NO. AS SHOWN.
12. TEST INDUCTANCE, AND "Q" AS SHOWN ABOVE.
13. BAKE COMPLETED ASSEMBLY FOR ONE HOUR AT 212°F.
14. REMOVE COMPLETED ASSEMBLY FROM OVEN AND ALLOW TO COOL TO ROOM TEMPERATURE.
15. REPEAT STEP NO.12.
16. TEST COIL WITH 1/4% 10KC UNIVERSAL BRIDGE. (THIS IS USED ONLY AS A SPOT CHECK).
17. TEST COIL WITH "Q" METER TYPE 260A.
18. TEST PRIMARY ONLY.
19. SET THE TEST FREQUENCY AS SHOWN ABOVE, AND SET THE OTHER DIAL FOR THE INDUCTANCE AS ABOVE.
20. SET THE (MULTIPLY "Q" BY) TO 2.
21. TUNE THE CORE IN TO THE COIL TO REACH THE MAX. READING ON THE Q METER.
22. USE FIXED MICA DIEL CAPACITOR ±1% ONLY.

NOTES

REQ'D.	ITEM	PART NUMBER	DESCRIPTION	SYMBOL
X	8	BS-100	SOLDER, SOFT	
X	7	WI-141-32-2	WIRE, ELECTRICAL, MAGNET	RED
X	6	WI-104-20/41 SNPQS	WIRE, ELECTRICAL, LITZ	
X	5	GL103	ADHESIVE, N-CEL	
X	4	GL130	ADHESIVE, Q-DOPE	
1	3	CF135-9	FORM, COIL, 2 FLANGE	
1	2	CU158	RETAINER	
1	1	CI137-2	CORE, ADJUSTABLE, TUNING	

M.GELLMAN — LIST OF MATERIAL

Q'T'Y./UNIT	MODEL USED ON	ASS'Y. NO.
1	LFCA-1	A-3723

SCALE —/— CODE A

MATERIAL —/—

FINISH —/—

UNLESS OTHERWISE SPECIFIED DIMENSIONS ARE IN INCHES AND INCLUDE CHEMICALLY APPLIED OR PLATED FINISHES

TOLERANCES: DECIMALS .X ± .05, .XX ± .01, .XXX ± .005; FRACTIONS ± 1/64; ANGLES ± 0° 30'

THE CONTENTS OF THIS DRAWING ARE THE EXCLUSIVE PROPERTY OF THE TECHNICAL MATERIEL CORP. ITS UNAUTHORIZED USE OR REPRODUCTION IN WHOLE OR IN PART IS STRICTLY FORBIDDEN.

THE TECHNICAL MATERIEL CORP.
MAMARONECK, NEW YORK

TITLE: TT223 TRANSFORMER, R.F., ADJUSTABLE

		DATE
DRAWN	SRG	7-29-64
CHECKED		9-23-64
ELECT. DES.		9-23-64
MECH. DES.		

FINAL APPROVAL — DATE

SHEET: A3827 — REV. LTR.: Ø

TMC FORM 109

REPROVEL NO. 440H 16107