THE CONTENTS OF THIS DRAWING ARE THE EXCLUSIVE PROPERTY OF THE TECHNICAL MATERIEL CORP. ITS UNAUTHORIZED USE FOR REPRODUCTION IN WHOLE OR IN PART IS STRICTLY FORBIDDEN.

REQ. PER UNIT	USED ON MODEL	ASS'Y. NO.	DATE		
2	TTR-10	1 AX-418 1 A-3171	5/24/63	A-3173	A

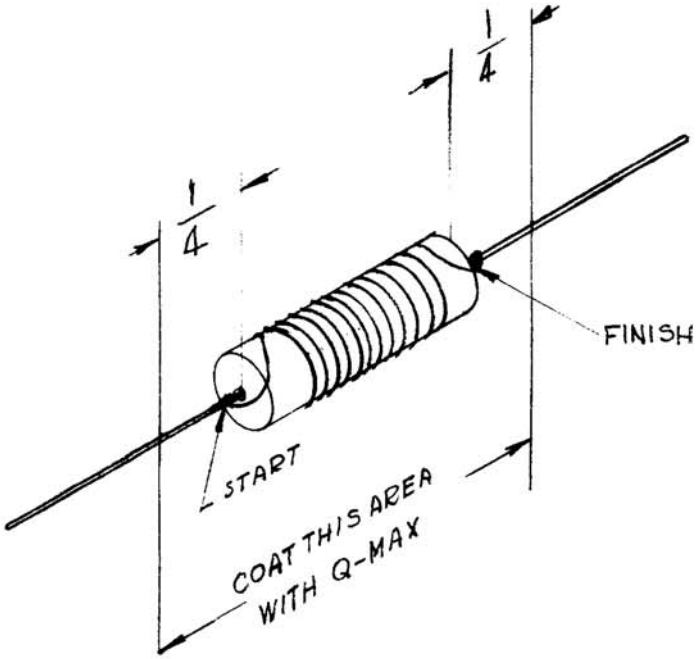

WINDING PROCEDURE:

1. WIND 12-1/2 TURNS CLOSEWOUND OF ITEM 2 ABOUT ITEM 1.
2. SOLDER ITEM 2 TO THE LEADS PROTRUDING FROM ITEM 1 WITH ITEM 4.
3. COAT COIL AND FORM WITH ITEM 3. DO NOT COAT LEADS 1/4 INCH FROM FORM.
4. BAKE FOR 1 HOUR AT 215° F. TO REMOVE ALL MOISTURE.

ELECTRICAL SPECIFICATIONS:

INDUCTANCE L = 2.55 uhy +.1 uhy
MINIMUM Q = 80 AT TEST FREQUENCY OF 25 MC
D.C. RESISTANCE = .008 OHMS

REQ.	ITEM	PART NO.	DESCRIPTION	SYMBOL
X	4	BS-100	SOLDER, SOFT	
X	3	GL-102	Q-MAX	
X	2	WI-122-18	MAGNET WIRE (SINGLE) #18	
1	1	CI-114-2	CORE, FIXED	

KOHN

SYM	DESCRIPTION	DATE	CH. NO.	DRAFTS	CHECKER	ENG. APP.
A	INDUCTANCE L WAS 1.0 uhy MINIMUM Q WAS 95	9.18.64	12411	WB	@	RKA

UNLESS OTHERWISE SPECIFIED DIMENSIONS ARE IN INCHES AND INCLUDE CHEMICALLY APPLIED OR PLATED FINISHES

TOLERANCES: DECIMALS .X ± .05, .XX ± .01, .XXX ± .005; FRACTIONS ± 1/64; ANGLES ± 0° 30'

SCALE

CODE A

STOCK SIZE

MATERIAL

TYPE & TEMPER | HEAT TREAT. SPEC.

FINISH & SPEC. NO.

THE TECHNICAL MATERIEL CORP.
MAMARONECK, NEW YORK

CL-318 ASSY

COIL, R.F., FIXED

DRAWN	CHECKED	FINAL APPROVAL
G.D.L	5/28/63	

ELEC. DES. APP.	MECH. DES. APP.		
RON KOHN 6/14/63		A-3173	A

OGILVIE PRESS, INC., BROOKLYN 17, N. Y. REPROVEL NO. 400H 3787