THE CONTENTS OF THIS DRAWING ARE THE EXCLUSIVE PROPERTY OF THE TECHNICAL MATERIEL CORP. ITS UNAUTHORIZED USE OR REPRODUCTION IN WHOLE OR IN PART IS STRICTLY FORBIDDEN.

REQ. PER UNIT	USED ON MODEL	ASS'Y. NO.	DATE	
1	HFR 1/T	A-2376	8-22-62	A-2529 B

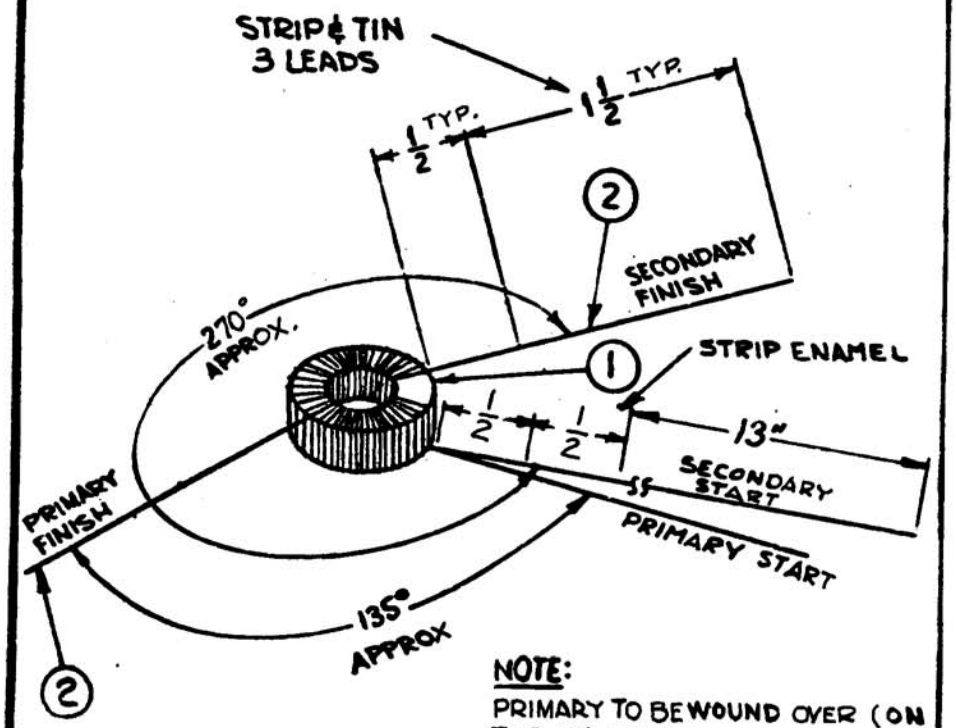

NOTE:
PRIMARY TO BE WOUND OVER (ON TOP OF) SECONDARY WINDING.

SCHEMATIC
T1007

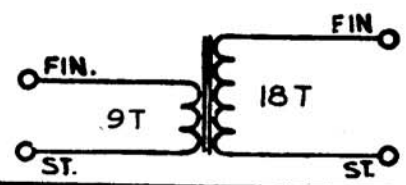

WINDING PROCEDURE

1. WIND SECONDARY APPROX. 18 TURNS EQUALLY SPACED OVER THE ANGLE & IN THE DIRECTION SHOWN.
2. REMOVE OR ADD TURNS TO MEET INDUCTANCE.
3. STAKE LEADS SECURELY WITH Q-MAX
4. WIND PRIMARY 9 TURNS EQUALLY SPACED OVER THE ANGLE & IN THE DIRECTION SHOWN.
5. STAKE LEADS SECURELY WITH Q-MAX.
6. BAKE FOR 1/2 HR. AT 215° F TO REMOVE MOISTURE.
7. COAT COIL & CORE WITH Q-MAX & BAKE 1/2 HR. AT 215° F.

* NOTE: USE TMC COIL STANDARDS FOR TEST REFERENCE.

ELECTRICAL SPECS

SECONDARY L = 1.48 μh ± 0.04 μh.
WITH COIL CLAMPED INTO Q-METER 1/2" AWAY FROM TERMINALS, WITH START END OF COIL TO LOW SIDE.

PRIMARY
Q = .160 AT 7.9 MC.
C DISTRIB. 0.6 μμf (FOR REF. ONLY)
L = 0.63 μh (FOR REF. ONLY)
C DISTRIB = 2.4 μμf. (FOR REF. ONLY)

REQ.	ITEM	PART NO.	DESCRIPTION	SYMBOL
X	3	GL 102	Q-MAX	
X	2	WJ-122-24	MAGNET WIRE, SINGLE # 24	
1	1	CI 127-1	CORE, TOROID	

SYM	DESCRIPTION	DATE	CH. NO.	DRAFTS	CHECKER	ENG. APP.
B	NOTE ADDED	1-12-67	17575	RME	G D.L	[signature]
A	C. DISTRIB ADDED TO SEC & PRI.	11-12-62	7651	[signature]	[signature]	[signature]

STOCK SIZE: —
MATERIAL: —
TYPE & TEMPER: —
HEAT TREAT. SPEC.: —
FINISH & SPEC. N.: —

THE TECHNICAL MATERIEL CORP.
MAMARONECK, NEW YORK

TZ-113 ASSEMBLY
TRANSFORMER, ANTENNA BAND 6, FREQ. 12-16 MC

DRAWN	CHECKED	FINAL APPROVAL
G. Lanson	[signature]	[signature]

ELEC. DES. APP.	MECH. DES. APP.	
J. ANGER		A-2529 B

UNLESS OTHERWISE SPECIFIED:
DIMENSIONS ARE IN INCHES
TOLERANCES ON
FRAC. ± 1/64 DEC. ± .005 ANGLES ± 1/2°

SCALE: DO NOT SCALE

MAXIMUM ALLOWABLE TOLERANCES HAVE BEEN DETERMINED AND ANY DEVIATIONS WILL BE CAUSE FOR REJECTION. REMOVE ALL BURRS AND SHARP EDGES

TMC FORM NO. 100-A

DEFIANCE NO. 1930