THE CONTENTS OF THIS DRAWING ARE THE EXCLUSIVE PROPERTY OF THE TECHNICAL MATERIEL CORP. ITS UNAUTHORIZED USE OR REPRODUCTION IN WHOLE OR IN PART IS STRICTLY FORBIDDEN.

A-2379

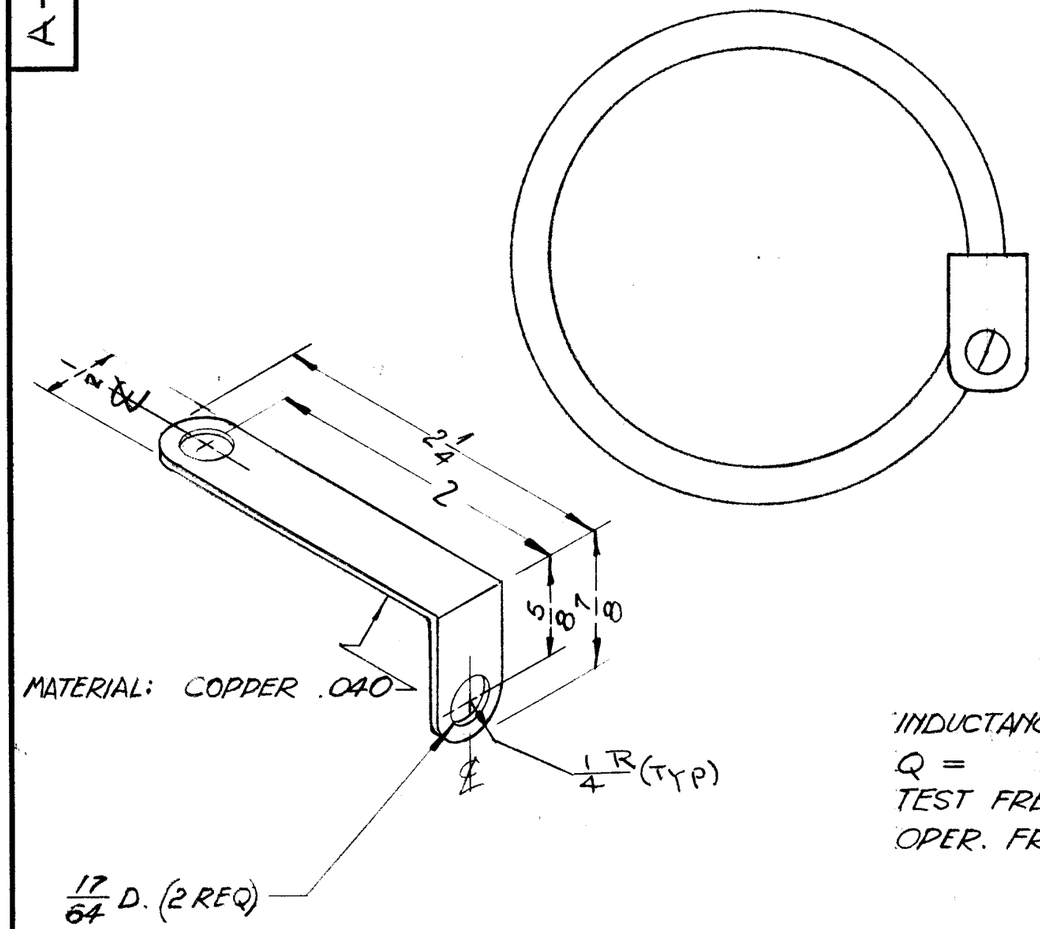

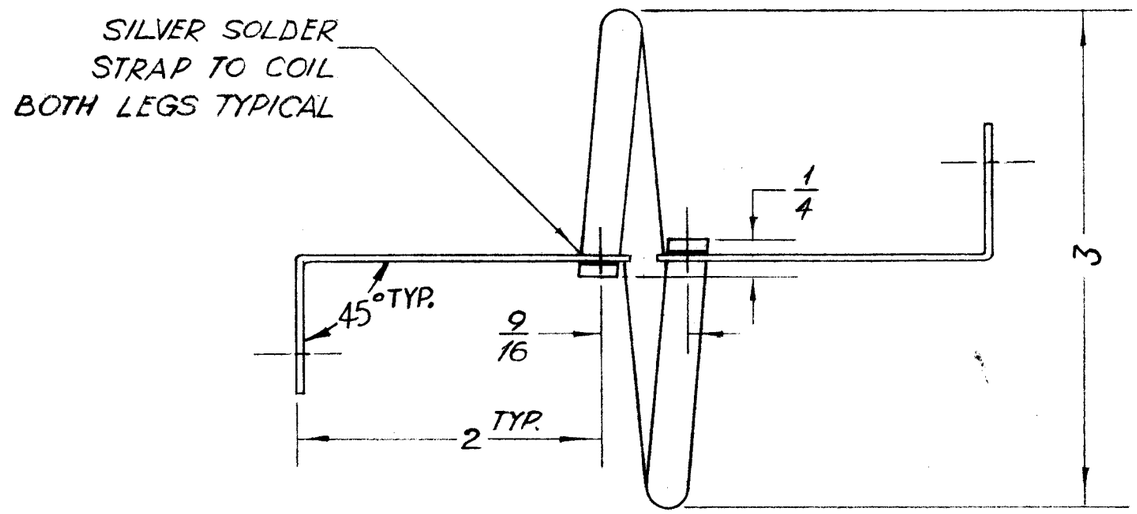

INDUCTANCE (L) = .135 μh ±10 %
Q = 200 OR GREATER
TEST FREQ = 25 Mc
OPER. FREQ = 2-30 Mc

SCHEMATIC

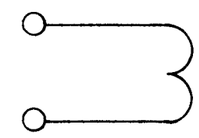

SYM	DESCRIPTION	DATE	CH. NO.	DRAFTS	CHECKER	ENG. APP.

UNLESS OTHERWISE SPECIFIED:
DIMENSIONS ARE IN INCHES
TOLERANCES ON
FRACTIONS ± 1/64 DECIMALS ± .005 ANGLES ± 1/2°

SCALE:

MAXIMUM ALLOWABLE TOLERANCES HAVE BEEN DETERMINED AND ANY DEVIATIONS WILL BE CAUSE FOR REJECTION. REMOVE ALL BURRS AND SHARP EDGES

A

REQ. PER UNIT	MODEL	SECTION	ASS'Y. NO.	DATE
1	TER-25KA70			2-3-62
1	TER-25KC70			2-3-62

USED ON

REQ.	ITEM	PART NO.	DESCRIPTION	SYMBOL

1/4 TUBING	THE TECHNICAL MATERIEL CORP. MAMARONECK, NEW YORK
STOCK SIZE	
COPPER	CL-285 ASSEMBLY
MATERIAL	
	K.C. Stu / RUZZO / SM
TYPE & TEMPER / HEAT TREAT. SPEC.	DRAWN / CHECKED / FINAL APPROVAL
SILVER PLATE S-245 .0003	OB / aa / A-2379
FINISH & SPEC. NO.	ELEC. DES. APP. / MECH. DES. APP.

TMC FORM NO. 109

DEFIANCE NO. 1020 36848