A-2216 A

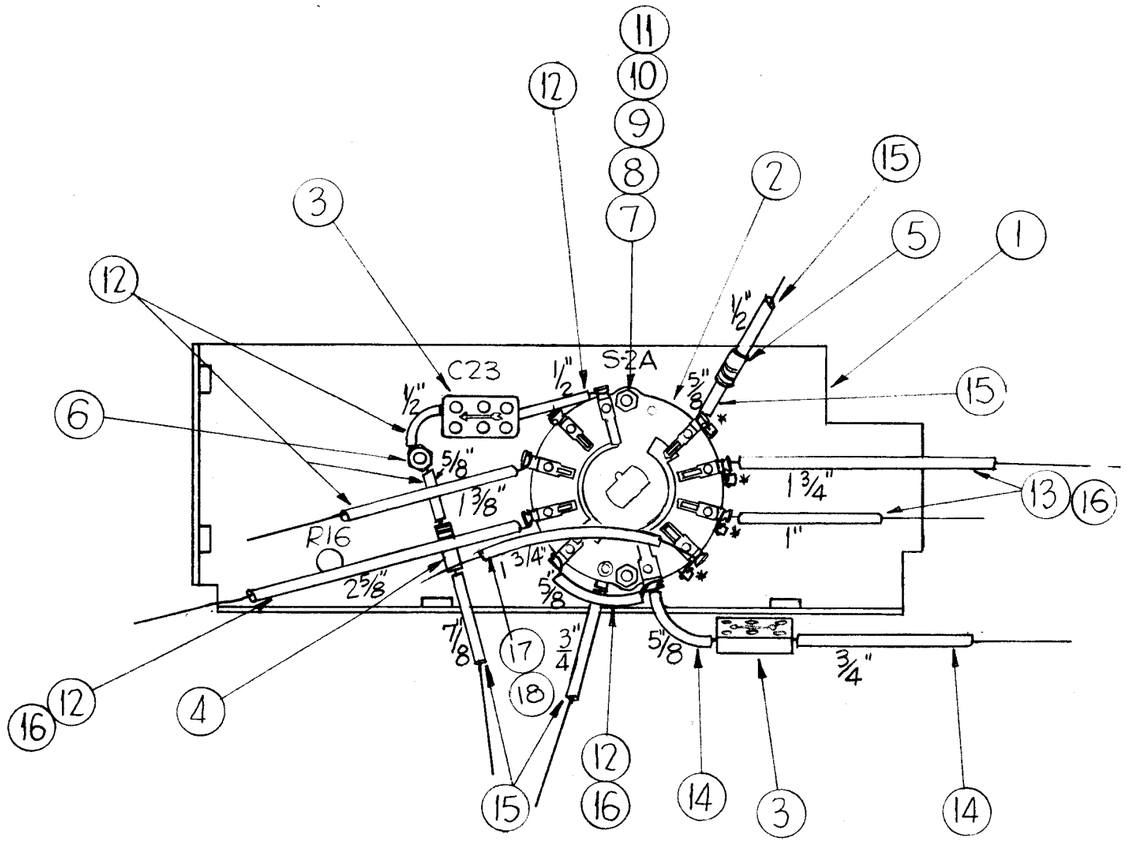

X	19	BS-100	Solder, Soft	
X	18	PX-104-4-.053	Sleeving, Insulation	Green
X	17	WL-100-4	Wire, Buss-Bar, Tinned	
X	16	WL-100-7	Wire, Buss-Bar, Tinned	
X	15	PX-104-1-.034	Sleeving, Insulation	Black
X	14	6		Blue
X	13	2		Yellow
X	12	PX-104-4-.034	Sleeving, Insulation	Green
2	11	NTH0440BN6	Nut, Hex	
2	10	LWS04MRN	Lockwasher, Split	
2	9	TE-117-21	Spacer	
8	8	WA-109-17	Washer, Fibre	
2	7	SCBP0440BN10	Screw, Machine	
1	6	TE-115-1	Terminal, Turret (Midget Type)	
1	5	RC20GF102J	Resistor, Carbon, Fixed	
1	4	RC20GF103K	Resistor, Carbon, Fixed	
2	3	CM15C511J	Capacitor, Fixed, Mica	
1	2	WS-101	Wafer, Switch	
1	1	MS-2621 (LD-957)	Bracket, Switch Mount	
REQ.	ITEM	PART NO.	DESCRIPTION	SYMBOL

* FRONT & REAR TERMINALS TIED TOGETHER WITH ITEM 16.

NOTE — MAKE ALL BUSS-WIRE LENGTHS 3/4" LONGER THEN SPECIFIED SLEEVING LENGTHS.

SYM	DESCRIPTION	DATE	CH. NO.	DRAFTS	CHECKER	ENG. APP.
A	ITEMS 17, 18 RELOCATED & LENGTH WAS 1 1/2"	4-26-66	16157	G.D.L		

UNLESS OTHERWISE SPECIFIED:
DIMENSIONS ARE IN INCHES
TOLERANCES ON
FRACTIONS ± 1/64 DECIMALS ± .005 ANGLES ± 1/2°

SCALE:

MAXIMUM ALLOWABLE TOLERANCES HAVE BEEN DETERMINED AND ANY DEVIATIONS WILL BE CAUSE FOR REJECTION. REMOVE ALL BURRS AND SHARP EDGES

REQ. PER UNIT	MODEL	SECTION	ASS'Y. NO.	DATE
1	GPE-1			10-20-61

USED ON

STOCK SIZE

MATERIAL

TYPE & TEMPER | HEAT TREAT. SPEC.

FINISH & SPEC. NO.

THE TECHNICAL MATERIEL CORP.
MAMARONECK, NEW YORK

RF SWITCH ASSEMBLY
1ST STAGE

DRAWN | CHECKER | FINAL APPROVAL

ELEC. DES. APP. | MECH. DES. APP.

A-2216 A

TMC FORM NO. 109

DEFIANCE NO. 1020 36352