REQ. PER UNIT	USED ON MODEL	ASS'Y. N.	DATE
2	APP-4		3-14-61
2	APP-5		3-14-61

A-2076 C

WINDING DATA

1. WIND 11 TURNS ON 1" O.D. TUBING. LEAVE 5/8 Extending on each end. Use padded Jigs for bends so that coating will not be harmed.
2. Scrape & Tin 1/4" on each end.
3. Test as shown.
4. Assemble and solder Lugs on end, holding 3 1/4" dim, ± 1/16.

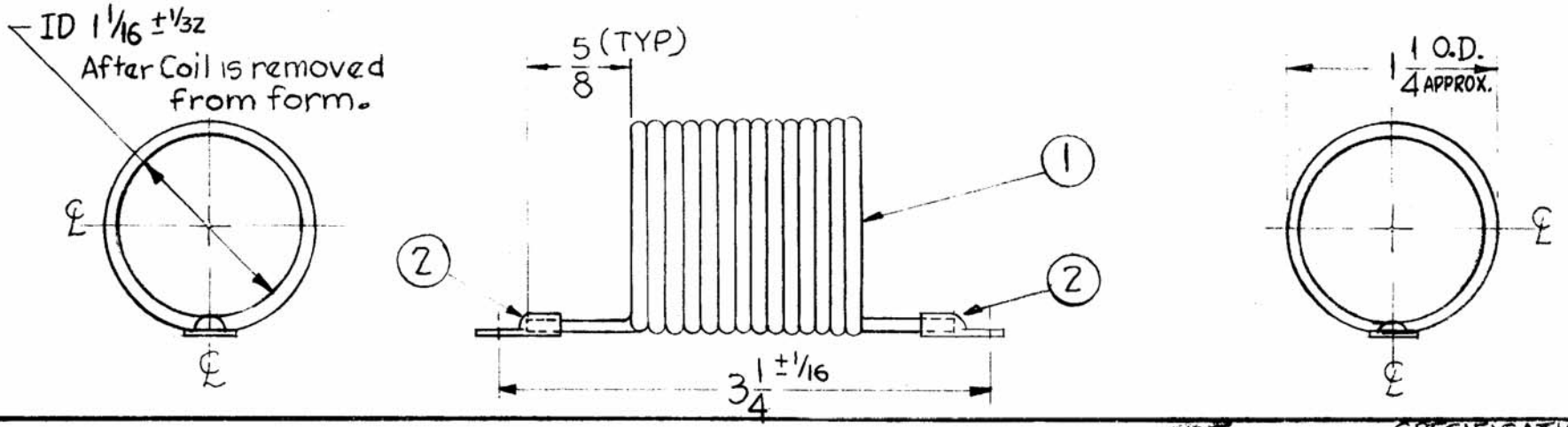

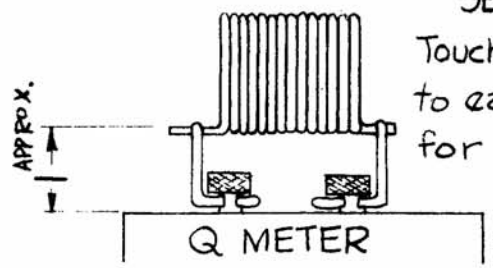

SET UP:
Touch Solder lightly to each support for measurements.

TEST DATA:
Test only first coil of each run all remaining Coils may then be passed by Visual Inspection. (Use Boonton "Q" Meter Type 160A or Equivalent).

SPECIFICATIONS
L = 2uhy ± .1uhy
Q = 200 or Greater
F = 7.9 MC

REQ.	ITEM	PART NO.	DESCRIPTION	SYMBOL
X	3	BS-100	Solder, Soft	
2	2	TE-141-3	Terminal, Lug	
X	1	WI-123-10	Wire, Magnet	

ISSUE	ITEM	CHANGED FROM	DATE	CH. NO.	DRAFTS	CHECKER	ENG. APP.
C		COIL ENDS RELOCATED	5.10.67	18196	[illegible]	[illegible]	FB [illegible]
B	1	ITEM (1) WAS WI-127-10	6-26-63	9349	[illegible]	[illegible]	[illegible]
A	1	ON WINDING DATA ITEM 1 WAS CLOSE WIND	4-12-61	4633	[illegible]	[illegible]	[illegible]

TOLERANCES

DEC. DIM. ±
FRAC. DIM. ±
ANGULAR DIM. ±

SCALE: Do Not Scale

MAXIMUM ALLOWABLE TOLERANCES HAVE BEEN DETERMINED AND ANY DEVIATIONS WILL BE CAUSE FOR REJECTION. REMOVE ALL BURRS AND SHARP EDGES

STOCK SIZE

MATERIAL

TYPE & TEMPER | HEAT TREAT. SPEC.

FINISH & SPEC. NO.

[illegible] TECHNICAL MATERIEL CORP.
[illegible]AMARONECK, NEW YORK

CL-269 ASS'Y.

DRAWN	CHECKED	FINAL APPROVAL
[illegible]	[illegible]	Ron [illegible]

ELEC. DES. APP	MECH. DES. APP
RK	

A-2076 C

FORM 108-A