A-2025

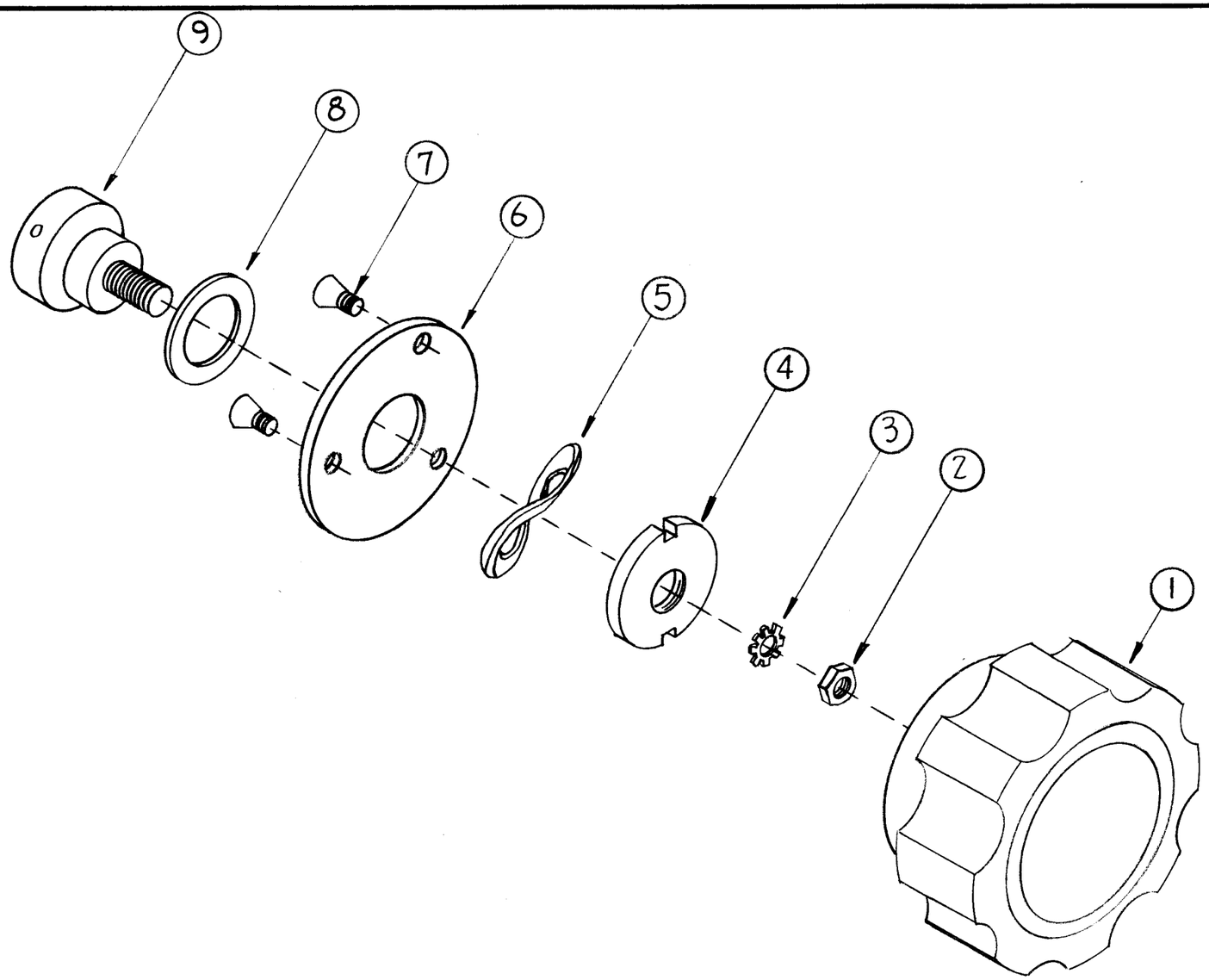


ASSEMBLY PROCEDURE

1. Assemble items 2, 3, 4, 5, 6, 8, and 9.
2. Adjust torque. (3-1/2 to 4-1/2 in. lbs.)
3. Lock with items 2 and 3 and secure with "LOCTITE".
4. Assemble to item 1 as shown.

| REQ. | ITEM | PART NO. | DESCRIPTION | SYMBOL |
|---|---|---|---|---|
| 1 | 9 | PM-567 | Mounting Stud | |
| 1 | 8 | WA-109-57 | Washer, Fibre | |
| 3 | 7 | SCFS0632BC5 | Screw, Machine | |
| 1 | 6 | PM-566 | Mounting Plate | |
| 1 | 5 | WA-132 | Spring Washer, Wavy | |
| 1 | 4 | PM-565 | Pressure Plate | |
| 1 | 3 | LWEZ5MRC | Lockwasher, External | |
| 1 | 2 | NT-102 | Nut, Hex | |
| 1 | 1 | PX-599 | Knob, Modification | |

| SYM | DESCRIPTION | DATE | CH. NO. | DRAFTS | CHECKER | ENG. APP. |
|---|---|---|---|---|---|---|
| | | | | | | |

UNLESS OTHERWISE SPECIFIED:
DIMENSIONS ARE IN INCHES
TOLERANCES ON
FRACTIONS ± 1/64 DECIMALS ± .005 ANGLES ± 1/2°

SCALE:

MAXIMUM ALLOWABLE TOLERANCES HAVE BEEN DETERMINED AND ANY DEVIATIONS WILL BE CAUSE FOR REJECTION.
REMOVE ALL BURRS AND SHARP EDGES

| REQ. PER UNIT | MODEL | SECTION | ASS'Y. NO. | DATE |
|---|---|---|---|---|
| 1 | CHG-1 | | | 11-21-60 |

USED ON

STOCK SIZE

MATERIAL

TYPE & TEMPER | HEAT TREAT. SPEC.

FINISH & SPEC. NO.

THE TECHNICAL MATERIEL CORP.
MAMARONECK, NEW YORK

KNOB, SLIP ASS'Y.

DRAWN | CHECKER | FINAL APPROVAL

ELEC. DES. APP. | MECH. DES. APP.

A-2025

TMC FORM NO. 109

DEFIANCE NO. 1020 86352