E

A-2006

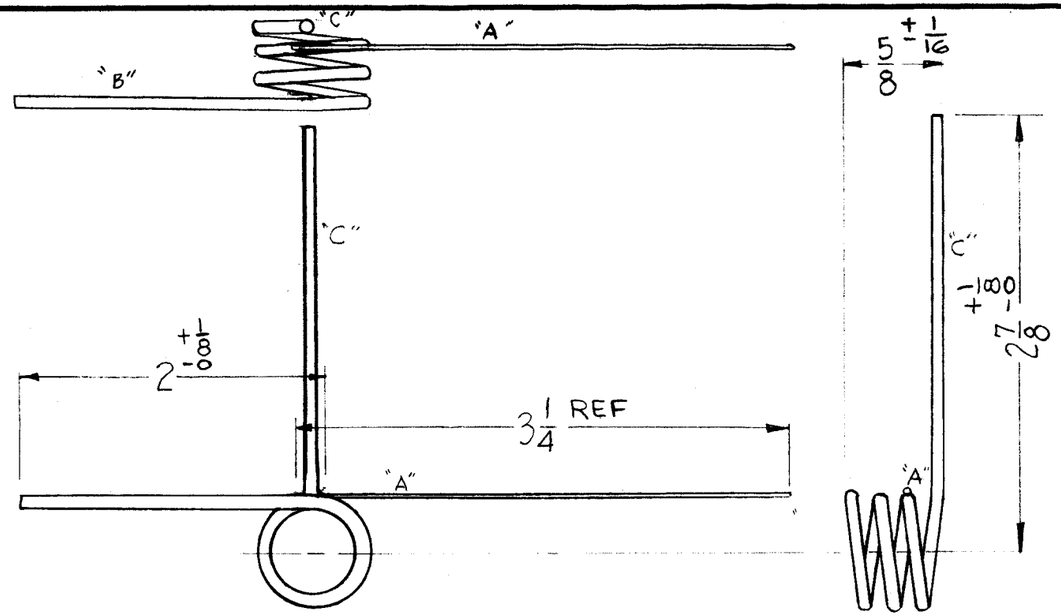

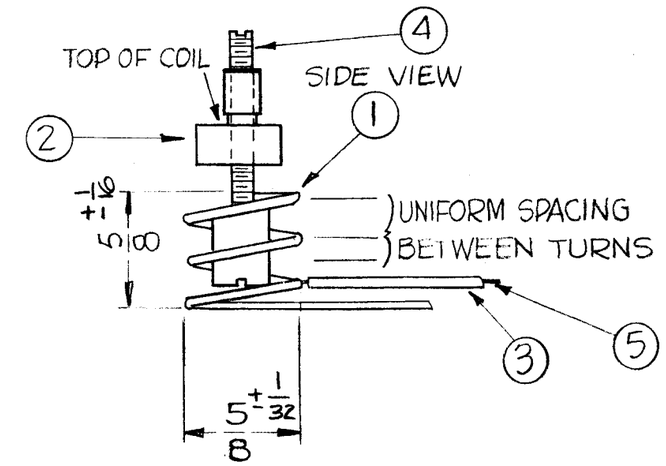

PROCEDURE

1. WIND 3 TURNS OF WIRE (ITEM 1) AROUND A 5/8" FORM AND EXTEND LEADS AS SHOWN.
2. SLIDE COIL OFF FORM.
3. TAP AT 1 TURN FROM BOTTOM, SOLDERING A 3¼" PIECE OF #22 BUSS WIRE (ITEM 5) TO COIL AS TAP.
4. SLIP SLEEVING OVER TAP WIRE.
5. PAINT WITH INSULEX.
6. BAKE FOR ½ HOUR AT 250°F.
7. TEST AS SHOWN BELOW, USING BOONTON Q-METER MODEL NUMBER 160A OR EQUIVALENT.

TEST (W/O CORE)

MINIMUM INDUCTANCE MUST BE LESS THAN .190 uhy.
TEST FREQ. = 25 MCS.
Q = AT LEAST 120.

RANGE	ASSEMBLY	CORE	COLOR	PART NUMBER
22-32 MC	A-2006	CI 109-19	RED	CL 260
19.5-32 MC	A-2006-2	CI 116-1	WHITE	CL 260-2

REQ.	ITEM	PART NO.	DESCRIPTION	SYMBOL
X	6	GL-104-2	INSULEX, U85	
1½"	5	WL-100-7	WIRE, BUSS-BAR #22	
1	4	SEE CHART	CORE, TUNING	
1¼"	3	PX-100-5-.034	INSULATION, SLEEVING	GRN.
1	2	SM-142	BUSHING, COIL FORM	
X	1	WL-100-1	WIRE, BUSS-BAR #10	

SYM	DESCRIPTION	DATE	CH. NO.	DRAFTS	CHECKER	ENG. APP.
E	TEST SPEC. WAS .156 UHY.	9-27-66	16903	RME	[illegible]	[illegible]
D	ADDED TOL.	6/3/66	16328	C.H.	[illegible]	[illegible]
C	CHART ADDED, MC RATING DELE. IT. 4 WAS CI-109-19, RED	6.12.64	11553	WB	[illegible]	[illegible]
B	PICTORIAL REVISED	4/26/61	4762	[illegible]	[illegible]	RK
A	REVISED & REDRAWN	1/13/60	3918	[illegible]		[illegible]

UNLESS OTHERWISE SPECIFIED:
DIMENSIONS ARE IN INCHES
TOLERANCES ON
FRACTIONS ± 1/64 DECIMALS ± .005 ANGLES ± 1/2°

SCALE: DO NOT SCALE

MAXIMUM ALLOWABLE TOLERANCES HAVE BEEN DETERMINED AND ANY DEVIATIONS WILL BE CAUSE FOR REJECTION. REMOVE ALL BURRS AND SHARP EDGES

REQ. PER UNIT	MODEL	SECTION	ASS'Y. NO.	DATE
1	RFD-1	PAL-1K, SBT-1K		1-12-61

USED ON

STOCK SIZE

MATERIAL

TYPE & TEMPER | HEAT TREAT. SPEC.

FINISH & SPEC. NO.

THE TECHNICAL MATERIEL CORP.
MAMARONECK, NEW YORK

CL-260 ASS'Y.

COIL RF TUNED (L225)

DRAWN: [illegible] | CHECKER: [illegible] | FINAL APPROVAL: [illegible]

ELEC. DES. APP. | MECH. DES. APP.: [illegible]

A-2006 E