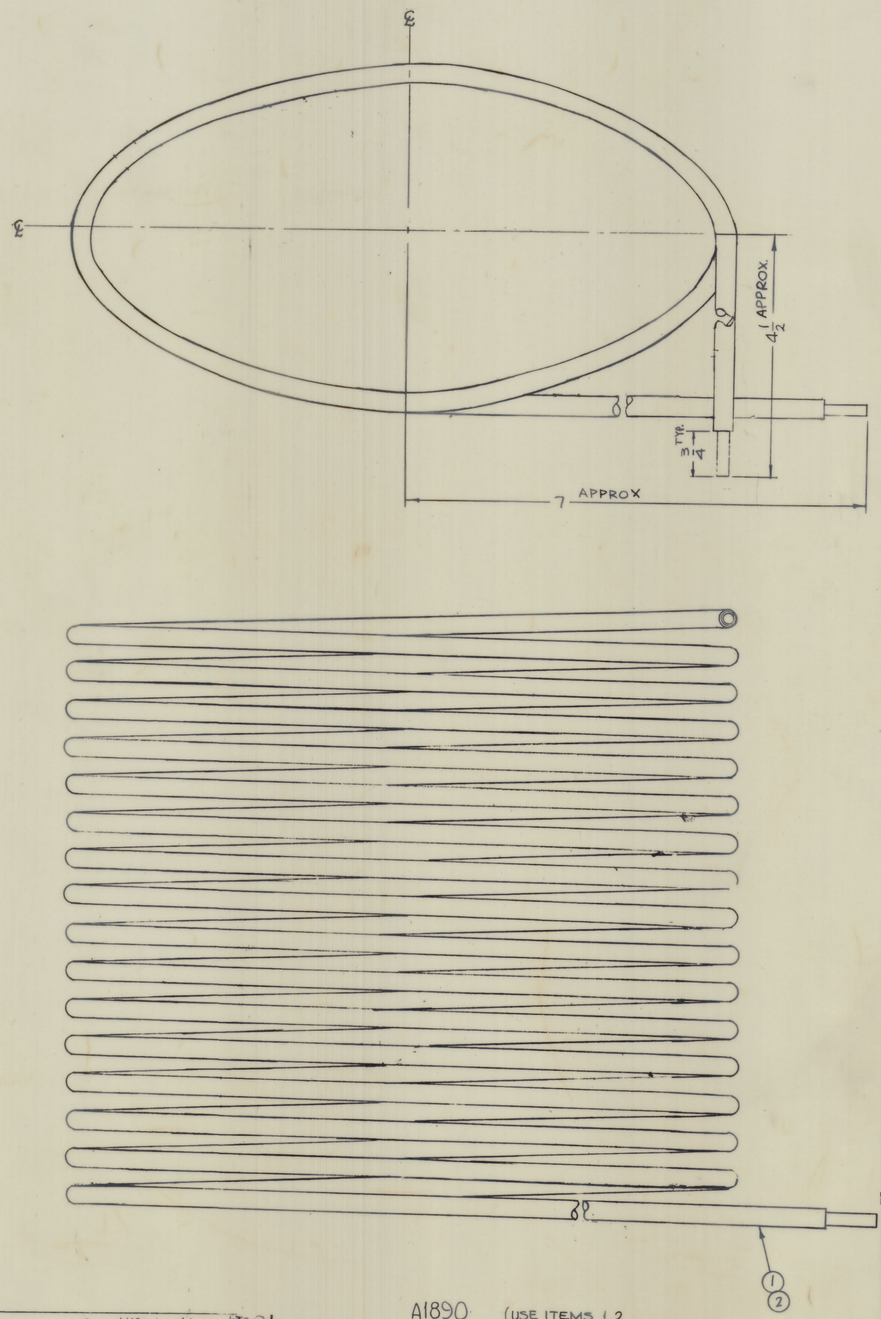

A1890 (USE ITEMS 1,2
APPLY PROCEDURE 1,2,3

— PROCEDURE —

1. SLIDE COPPER INTO TEFLON.
2. SHRINK TEFLON AS PER S825.
3. WIND ON ANTENNA TUNER COIL FORM.
4. PLACE 7, PM680 TO APPROX. POSITION SHOWN ON PRINT. $\pm\frac{1}{2}$
5. ADD 4 COIL SUPPORTS.
6. CUT TEFLON TUBING FOR 6 PM680, TO EXACT POSITION, AND COPPER SHIM AND TIGHTEN WITH 10-32 SCREWS
7. FLATTEN ENDS AND PUNCH 2 HOLES (AS INDICATED).
8. TEST INDUCTANCE AT 2.5 MC START TO FINISH 30 uhy ±10%

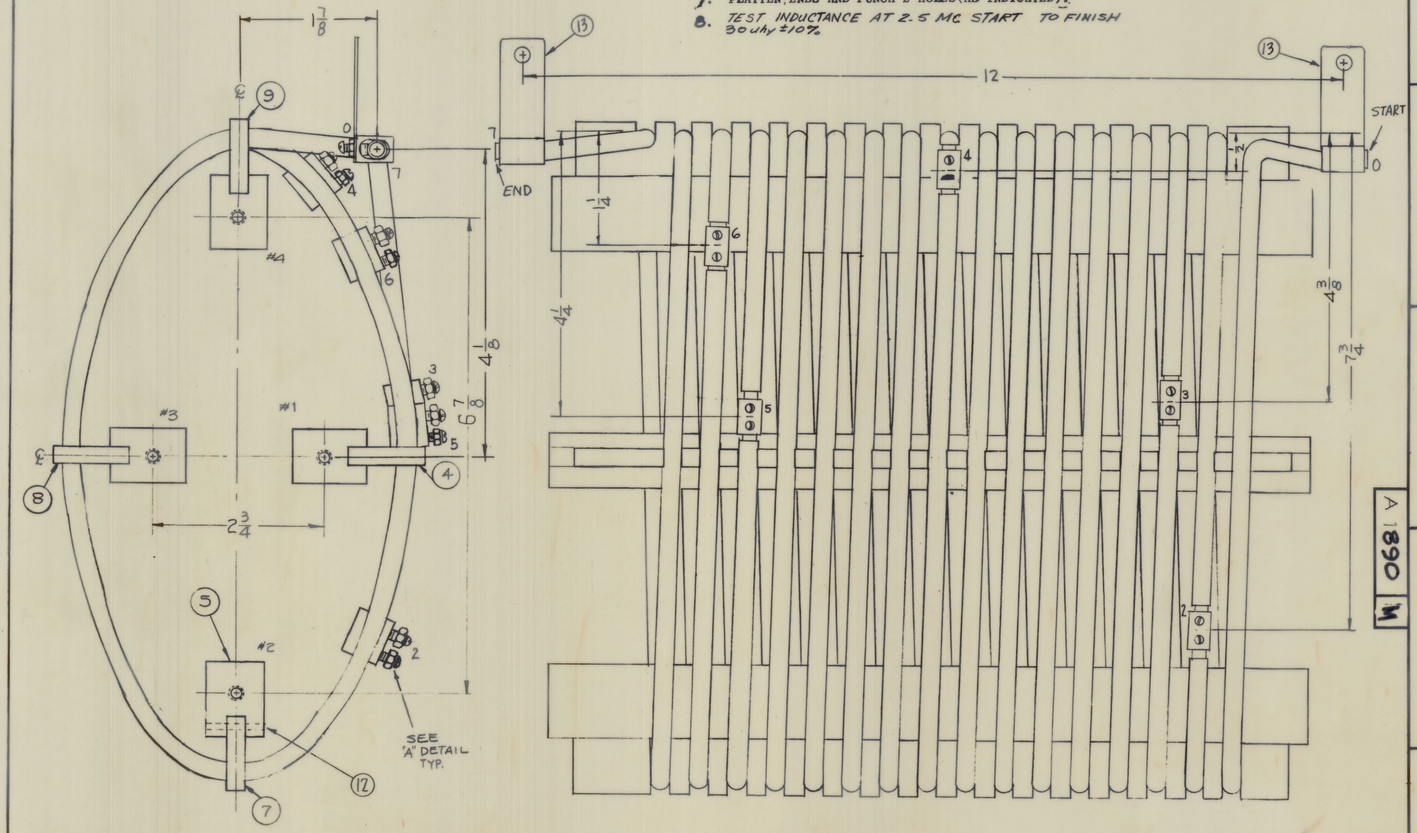

* THIS STEP DETERMINED ON ASS'Y IN SUPPORTS.

A1890-1 (USE 1 A1890 & ITEMS 3 THRU 12
* ITEM 13 INCLUDED ONLY AS SPARE PARTS WITH CL 221, (NORMALLY USED ON AC 112)

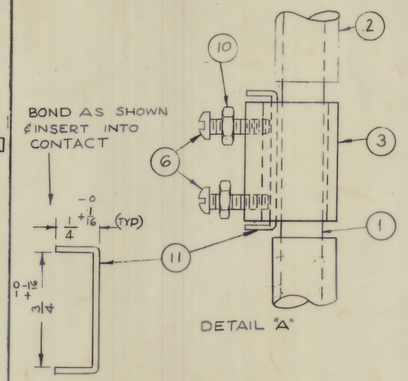

DETAIL "A"

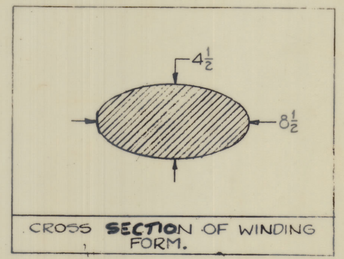

CROSS SECTION OF WINDING FORM.

REQ.	ITEM	PART NO.	DESCRIPTION	SYMBOL
* 2	13	MS5057	CONNECTOR, ELECT.	
12	12	PN 99-062-16	PIN, ROLL	
7	11	MS 2495-1-1.25	STRAP, .031 × 3/16 WIDE	
14	10	NTH0832BN10	NUT, MACHINE 8-32	
1	9	PX520-4	INSERT, COIL SUPPORT	
1	8	PX520-3	INSERT, COIL SUPPORT	
1	7	PX520-2	INSERT, COIL SUPPORT	
14	6	SCBP0832BN8	SCREW, MACHINE (8-32.)	
4	5	PX 519	SUPPORT, COIL	
1	4	PX 520-1	INSERT, COIL SUPPORT	
7	3	PM 680	CONNECTOR COIL STRAP	
	2	PX845-250	SLEEVING, TEFLON, SHRINKABLE	S825
34	1	TU 100-4 S	COPPER TUBING .250 OD.	

29'-7"

ISSUE	ZONE	DESCRIPTION	DATE	CH. NO.	DRAFTS	CHECKER	ENG. APP.
M		COIL TERMLS RELOCATED ITEM 3 RELOCATED, IT. 13 ADDED	9-14-66	16830	[illegible]		[illegible]
L		IT 3 & 11 WERE 6, IT 6 & 10 WERE 12. PICTORIAL CLARIFIED	9.9.66	16830	WHD	[illegible]	[illegible]
K	–	ASSY DATA REVISED & CLARIFIED	3-4-66	15912	G.D.L.	[illegible]	[illegible]
J	–	NOTE 10 REF NOTE A1890-1 ADDED	1/12/66	15559	M.V.V.	[illegible]	[illegible]
H	[illegible]	B/M UPDATED; IT. (2) WAS "34/PX370-1-7/TEFLON TUBING PROCEDURE: NEW #4 ADDED, OTHER #'S RENUMBERED.	12-31-64	13199	[illegible]	[illegible]	[illegible]

TOLERANCES

DEC. DIM. ±
FRAC. DIM. ±
ANGULAR DIM. ±

SCALE: (Do Not Scale)

MAXIMUM ALLOWABLE TOLERANCES HAVE BEEN DETERMINED AND ANY DEVIATIONS WILL BE CAUSE FOR REJECTION. REMOVE ALL BURRS AND SHARP EDGES

ISSUE	ZONE	DESCRIPTION	DATE	CH. NO.	DRAFTS	CHECKER	ENG. APP.

REQ PER UNIT	MODEL	SECTION	ASS'Y. NO.	DATE
1	ACU			10-17-60
1	GPT 40K	AT 101		7-20-60

USED ON

STOCK SIZE
MATERIAL
TYPE & TEMPER
HEAT TREAT. SPEC.
FINISH & SPEC. NO.

THE TECHNICAL MATERIEL CORP.
MAMARONECK. NEW YORK

CL 221 ASSY

DRAWN | ELEC. DES. APP. | MECH. DES. APP.
CHECKED | FINAL APPROVAL

A 1890 M

A 1890 M