| TMC P/N | ITEM 2 | THICKNESS |
|---|---|---|
| A1654 — | SP128 — | .040 |
| A1654-2 | SP128-3 | .030 |

| REQ. PER UNIT | USED ON MODEL | ASS'Y. NO. | DATE | A-1654 | D |
|---|---|---|---|---|---|
| 1 | AX-154 | GPT-10K | | | |

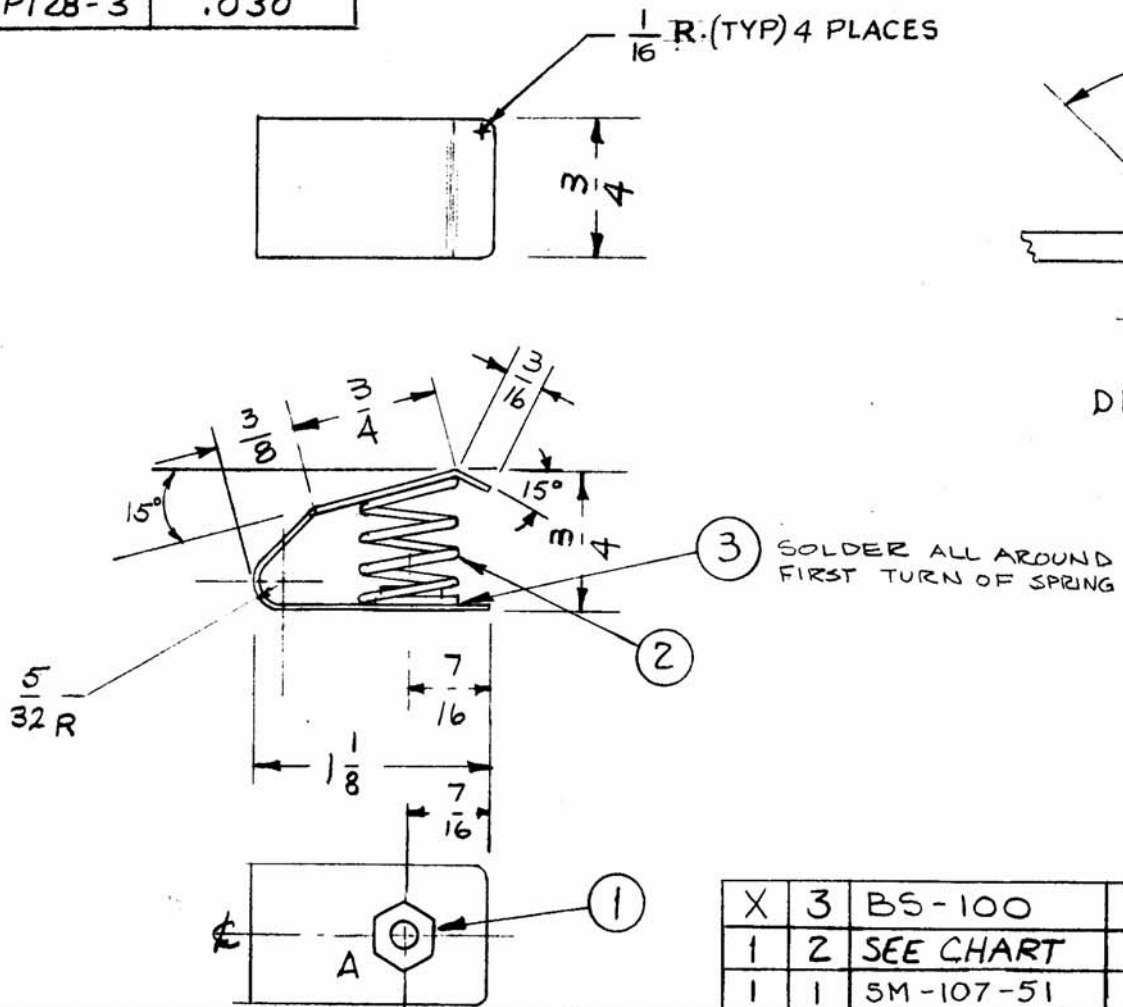


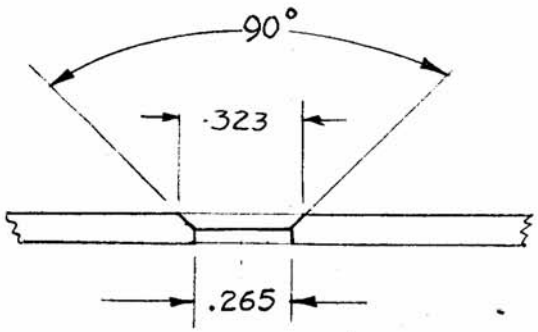


DETAIL "A" — 1 REQ.

NOTICE TO PERSONS RECEIVING THIS DRAWING

THE TECHNICAL MATERIEL CORPORATION claims proprietary right in the material disclosed hereon. This drawing is issued in confidence for engineering information only and may not be reproduced or used to manufacture anything shown hereon without permission from THE TECHNICAL MATERIEL CORPORATION to the user. This drawing is loaned for mutual assistance and is subject to recall at any time.

Property of:

THE TECHNICAL MATERIEL CORPORATION
MAMARONECK, NEW YORK

| REQ. | ITEM | PART NO. | DESCRIPTION | SYMBOL |
|---|---|---|---|---|
| X | 3 | BS-100 | SOLDER, SOFT | |
| 1 | 2 | SEE CHART | SPRING FRICTION DRIVE | |
| 1 | 1 | SM-107-51 | INSERT HEX | |

| ISSUE | ITEM | CHANGED FROM | DATE | CH. NO. | DRAFTS | CHECKER | ENG. APP. |
|---|---|---|---|---|---|---|---|
| D | | ADDED P/N CHART | 2.27.68 | 18786 | HG | [illegible] | FB |
| C | 1 | 1/16 R (TYP) 4 PL. ADDED | 6-22-64 | 11634 | A.M. | [illegible] | [illegible] |
| B | 1 | ITEM 3 ADDED TO BUILDUP & PICT. | 12/4/63 | 10574 | [illegible] | [illegible] | [illegible] |
| A | 2<br>1 | DIM. 3/8 & (A) DETAIL ADDED<br>ITEM (1) WAS NT-129-1032-3 | 6-27-61 | 5144 | G.D.L. | RU | [illegible] |

TOLERANCES

DEC. DIM. ±
FRAC. DIM. ±
ANGULAR DIM. ±

SCALE:

MAXIMUM ALLOWABLE TOLERANCES HAVE BEEN DETERMINED AND ANY DEVIATIONS WILL BE CAUSE FOR REJECTION. REMOVE ALL BURRS AND SHARP EDGES

STOCK SIZE: SEE CHART

MATERIAL: BERYLLIUM COPPER

TYPE & TEMPER | HEAT TREAT. SPEC.

FINISH & SPEC. NO.: S245 SILVER PLATE, S423 SILVER KOTE

THE TECHNICAL MATERIEL CORP.
MAMARONECK, NEW YORK

AX-154 ASS'Y
CONTACT, RF

DRAWN: 3/9/59 Torillo | CHECKED | FINAL APPROVAL

ELEC. DES. APP | MECH. DES. APP

A-1654 D

FORM 108-A