B

A-1550

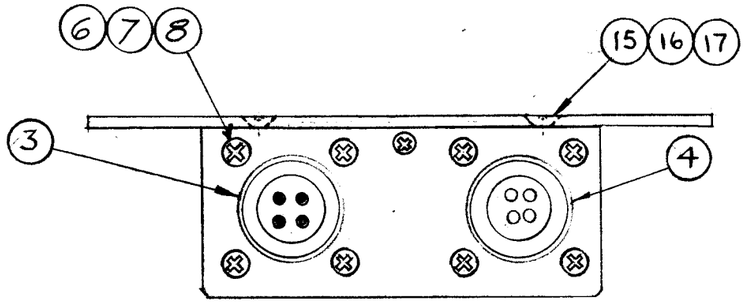

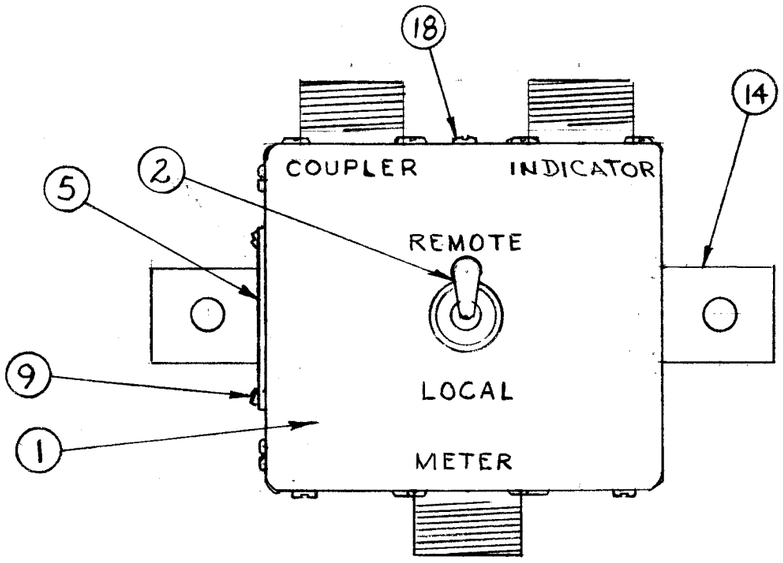

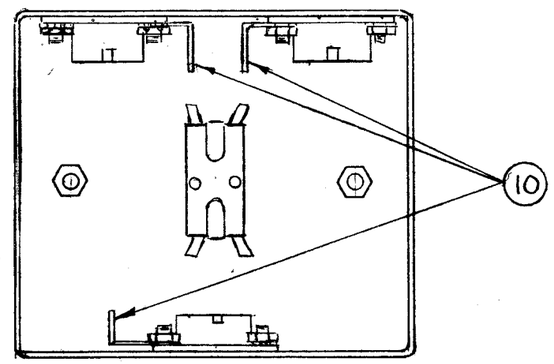

REAR VIEW

(COVER REMOVED)

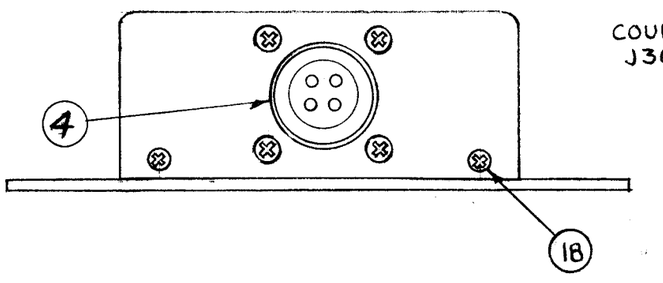

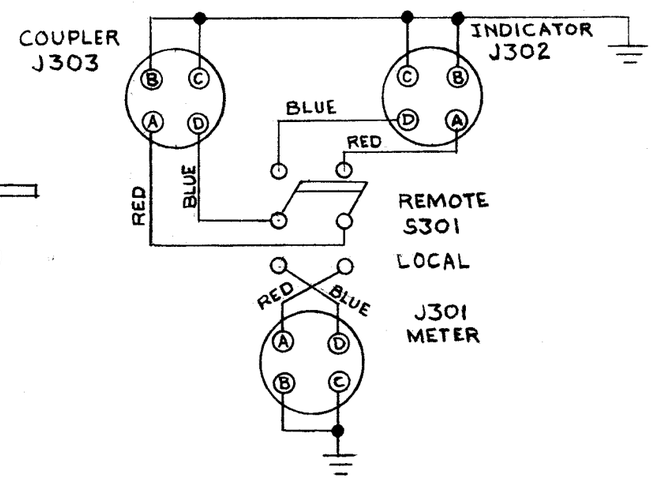

X	19	BS1QQ	SOLDER, TIN ALLOY	
7	18	SFBQ44QSN3	SCREW, SELF-TAPPING, THREAD CUTTING	
2	17	NTHQ632BN8	NUT, PLAIN, HEXAGON	
2	16	LWEQ6MRN	WASHER, LOCK, EXTERNAL	
2	15	SCFPQ632BN5	SCREW, MACHINE	
1	14	MS1383	PLATE, MOUNTING	
5"	13	WL100-7	WIRE, ELECTRICAL, BUSS.	
6"	12	MWC22(7)U2	WIRE, ELECTRICAL, INSULATED	
6"	11	MWC22(7)U6	WIRE, ELECTRICAL, INSULATED	
3	10	TE-113-.120	TERMINAL, LUG	
4	9	SFB0256SN4	SCREW, SELF-TAPPING, THREAD CUTTING	
12	8	NTH0440BN8	NUT, PLAIN, HEX.	
12	7	LWE04MRN	WASHER, LOCK, EXTERNAL	
12	6	SCBP0440BN6	SCREW, MACHINE	
1	5	NP-283-2	PLATE, IDENT., COML.	
2	4	MS3102A14S2S	CONNECTOR, RECEPTACLE, FEMALE	J301 J302
1	3	MS3102A14S2P	CONNECTOR, RECEPTACLE, MALE	J303
1	2	ST-103-16-63	SWITCH, TOGGLE, DPDT	S301
1	1	LD400/BX162	CASE & COVER	
REQ.	ITEM	PART NO.	DESCRIPTION	SYMBOL

ISSUE	ITEM	CHANGED FROM	DATE	CH. NO.	DRAFTS	CHECKER	ENG. APP.
C	1	IT. 11 THRU 19 ADD. DWG. REVISED.	1.14.65	13303	RL	@	[illegible]
B	1	NAMEPLATE MOVED TO SIDE. WAS NP-102-25 (ITEM 5)	5/29/59	968	HO	[illegible]	[illegible]
A	1	INDICATOR WAS MONITOR	10/13/58	482	[illegible]	[illegible]	[illegible]

TOLERANCES

DEC. DIM. ±

FRAC. DIM. ±

ANGULAR DIM. ±

SCALE:

MAXIMUM ALLOWABLE TOLERANCES HAVE BEEN DETERMINED AND ANY DEVIATIONS WILL BE CAUSE FOR REJECTION.

REMOVE ALL BURRS AND SHARP EDGES

REQ. PER UNIT	MODEL	PROJECT NO.	ASS'Y. NO.	DATE
	JB111			
	SWR-3000-JB-1			6-2-58

USED ON

STOCK SIZE

MATERIAL

TYPE & TEMPER | HEAT TREAT. SPEC.

FINISH & SPEC. NO.

THE TECHNICAL MATERIEL CORP.
MAMARONECK. NEW YORK

JB111 ASSEMBLY

DRAWN	CHECKED	FINAL APPROVAL
6/2/58	[illegible]	[illegible]
ELEC. DES. APP.	MECH. DES. APP.	A-1550 B