REQ. PER UNIT	USED ON MODEL	ASS'Y. NO.	DATE		
1	GSB-1 MARK II	A-1417	5-7-57	A-1416	A

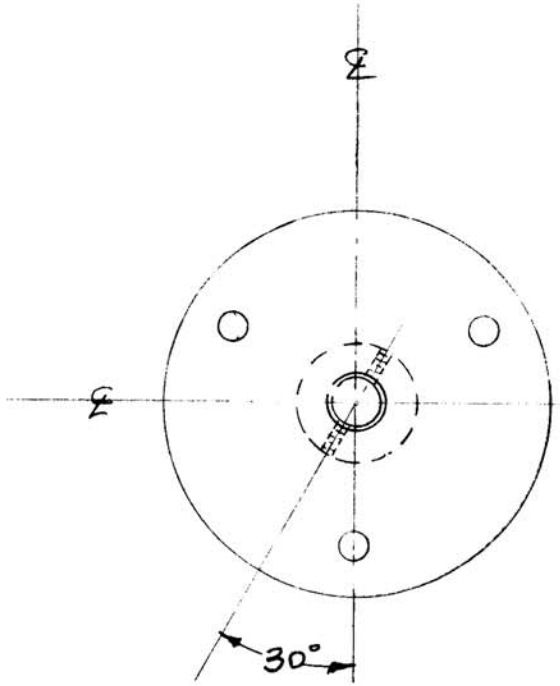

NOTE POSITION OF HUB IN RELATION TO SUPPORT PLATE

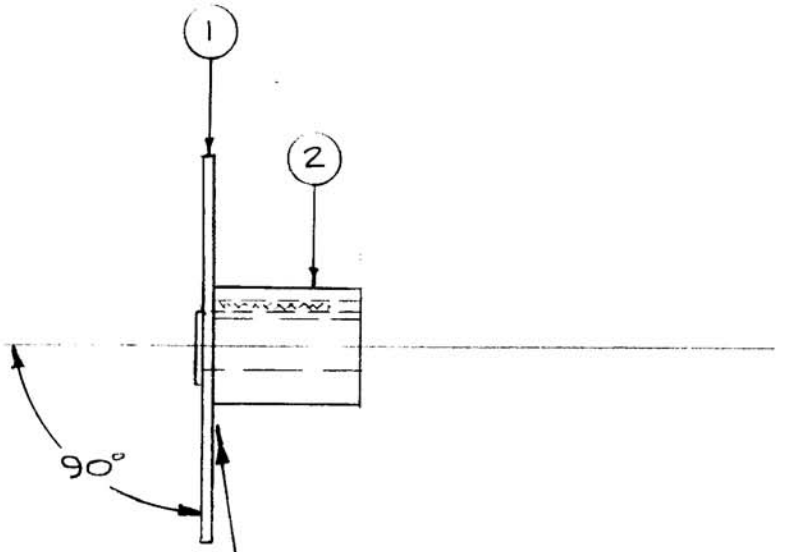

NOTE: PRESS FIT ITEM 1 TO ITEM 2 AND SWEAT SOLDER.

REQ.	ITEM	PART NO.	DESCRIPTION	SYMBOL
1	2	PM-442	HUB	
1	1	MS-586	PLATE, SUPPORT	

ISSUE	ITEM	CHANGED FROM	DATE	CH. NO.	DRAFTS	CHECKER	ENG. APP.
A	2	SOLDER NOTE ADDED	5 9 57	1	RC.	[illegible]	[illegible]
	1	Item 3 was SC-123-0-4					

TOLERANCES

DEC. DIM. ±
FRAC. DIM. ±
ANGULAR DIM. ±

SCALE:

MAXIMUM ALLOWABLE TOLERANCES HAVE BEEN DETERMINED AND ANY DEVIATIONS WILL BE CAUSE FOR REJECTION.
REMOVE ALL BURRS AND SHARP EDGES

STOCK SIZE

MATERIAL

TYPE & TEMPER: CADIUM PLATE .0003
HEAT TREAT. SPEC.

FINISH & SPEC. NO.

THE TECHNICAL MATERIEL CORP.
MAMARONECK, NEW YORK

SUPPORT PLATE ASS'Y.
GSB-1 - MARK II

DRAWN	CHECKED	FINAL APPROVAL	
5-7-57	[illegible]	[illegible]	
ELEC. DES. APP.	MECH. DES. APP.	A-1416	A

FORM - 108 - A