A-1405 A

NOTICE TO PERSONS RECEIVING THIS DRAWING

THE TECHNICAL MATERIEL CORPORATION claims proprietary right in the material disclosed hereon. This drawing is issued in confidence for engineering information only and may not be reproduced or used to manufacture anything shown hereon without permission from THE TECHNICAL MATERIEL CORPORATION to the user. This drawing is loaned for mutual assistance and is subject to recall at any time.

Property of:

THE TECHNICAL MATERIEL CORPORATION
MAMARONECK, NEW YORK

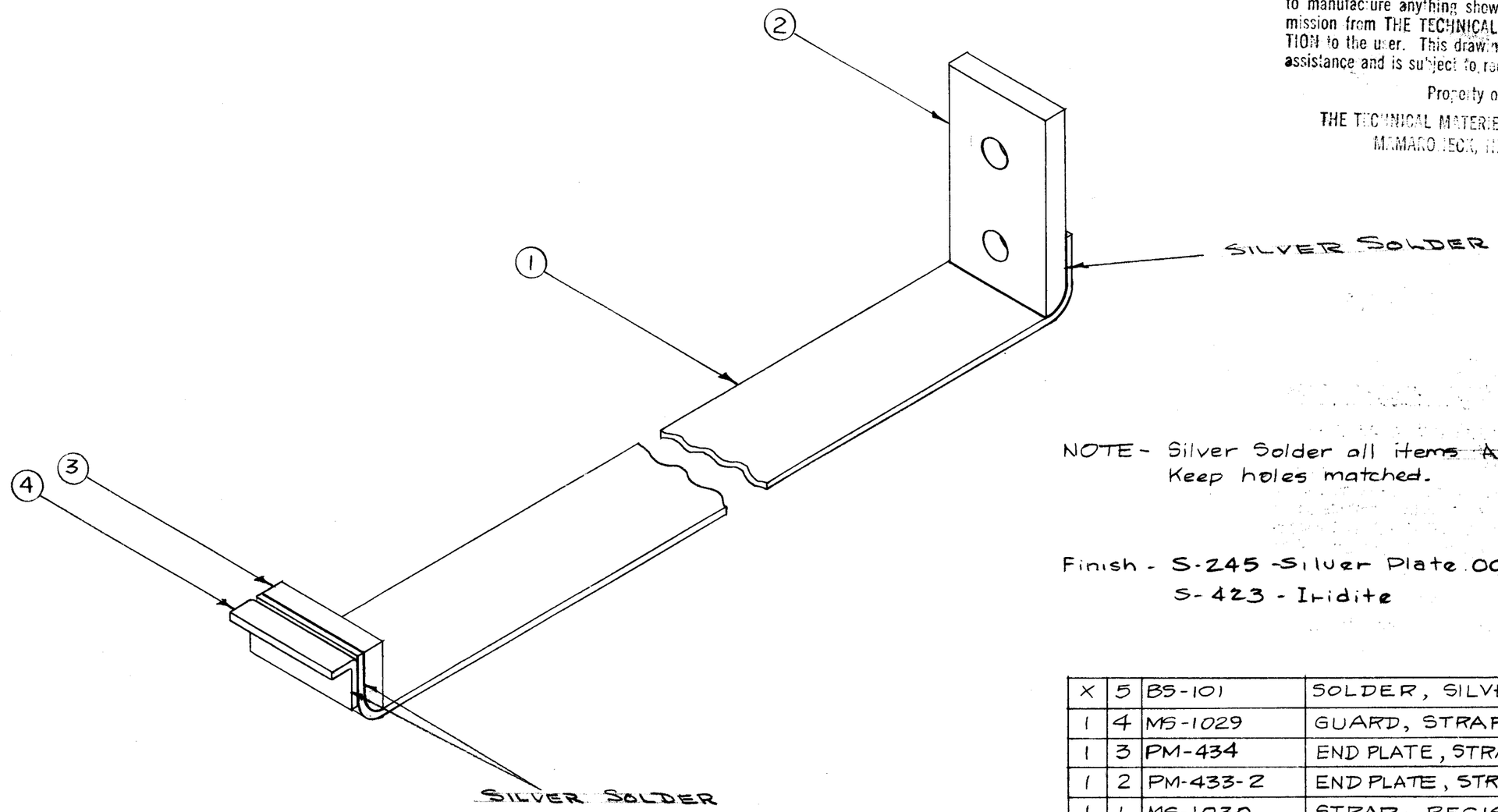

NOTE - Silver Solder all items ~~As Shown~~,
Keep holes matched.

Finish - S-245 - Silver Plate .0005
S-423 - Iridite

REQ.	ITEM	PART NO.	DESCRIPTION	SYMBOL
X	5	BS-101	SOLDER, SILVER	
1	4	MS-1029	GUARD, STRAP	
1	3	PM-434	END PLATE, STRAP, SMALL	
1	2	PM-433-2	END PLATE, STRAP, LARGE	
1	1	MS-1030	STRAP, RESISTOR	

ISSUE	ITEM	CHANGED FROM	DATE	CH. NO.	DRAFTS	CHECKER	ENG. APP.
A	1	Finish Added	6/9/59		J.C.B.		

TOLERANCES
DEC. DIM. ±
FRAC. DIM. ±
ANGULAR DIM. ±

SCALE: —//—

MAXIMUM ALLOWABLE TOLERANCES HAVE BEEN DETERMINED AND ANY DEVIATIONS WILL BE CAUSE FOR REJECTION.
REMOVE ALL BURRS AND SHARP EDGES

REQ. PER UNIT	MODEL	PROJECT NO.	ASS'Y. NO.	DATE
2	TER-5000		A-1431(8)	3-22-57

USED ON

STOCK SIZE: —//—

MATERIAL: —//— —//—

TYPE & TEMPER: See Note

HEAT TREAT. SPEC.

FINISH & SPEC. NO.

THE TECHNICAL MATERIEL CORP.
MAMARONECK. NEW YORK

STRAP, RESISTOR, BOTTOM
ASS'Y. (TER-5000)

DRAWN: 3-22-57 | CHECKED | FINAL APPROVAL

ELEC. DES. APP. | MECH. DES. APP.

A-1405 A