A-1377 B

MARKING PROCESS: AS PER T M C SPECIFICATION S-727

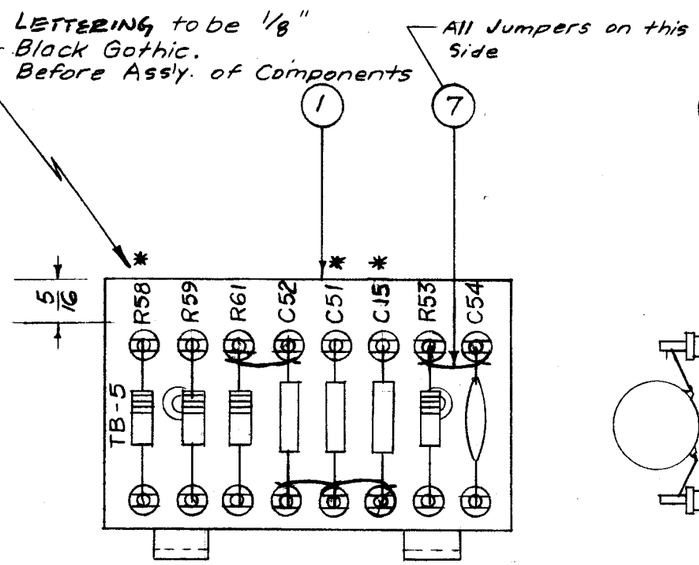

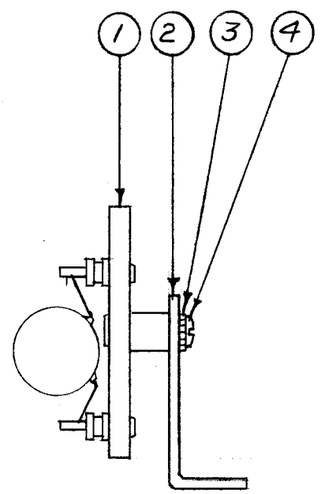

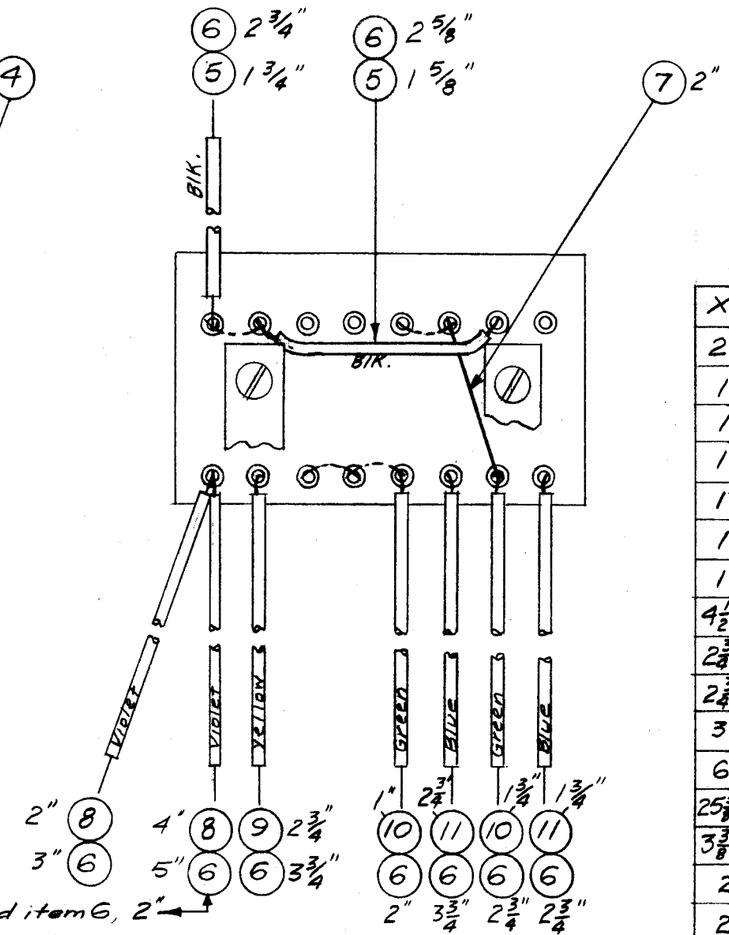

* Do Not Solder This End of R58, C51, 15 On This Ass'y.

For MSR-1, Make item 8 1" and item 6, 2"
For MSR-3, Leave as shown.

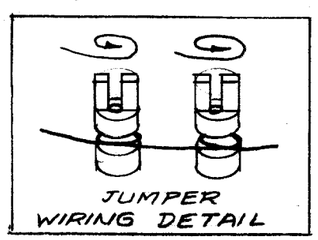

NOTICE TO PERSONS RECEIVING THIS DRAWING

THE TECHNICAL MATERIEL CORPORATION claims proprietary right in the material disclosed hereon. This drawing is issued in confidence for engineering information only and may not be reproduced or used to manufacture anything shown hereon without permission from THE TECHNICAL MATERIEL CORPORATION to the user. This drawing is loaned for mutual assistance and is subject to recall at any time.

Property of:
THE TECHNICAL MATERIEL CORPORATION
MAMARONECK, NEW YORK

REQ.	ITEM	PART NO.	DESCRIPTION	SYMBOL
X	19	BS-100	Solder, Soft	
2	18	RC20GF474K	Resistor, Fixed, Comp.	R61 R59
1	17	RC20GF473K	Resistor, Fixed, Comp.	R58
1	16	RC20GF391K	Resistor, Fixed, Comp.	R53
1	15	CC21SL470K	Capacitor, Fixed, Ceramic	C15
1	14	CC-100-16	Capacitor, Fixed, Ceramic	C54
1	13	CM20D102J	Capacitor, Fixed, Mica	C52
1	12	CM20D681J	Capacitor, Fixed, Mica	C51
4 1/2"	11	PX-104-6-.034	Insulation, Sleeving (Size 20)	Blue
2 3/8"	10	PX-104-4-.034	Insulation, Sleeving (Size 20)	Green
2 3/4"	9	PX-104-2-.034	Insulation, Sleeving (Size 20)	Yellow
3"	8	PX-104-9-.034	Insulation, Sleeving (Size 20)	Violet
6"	7	WL-100-8	Wire, Buss (Size 24)	
25 3/8"	6	WL-100-7	Wire, Buss (Size 22)	
3 3/8"	5	PX-104-1-.034	Insulation, Sleeving (Size 20)	Black
2	4	SCBS0632BC6	Screw, Machine	
2	3	LWE06MRC	Lockwasher, External	
2	2	MS-993	Bracket, Terminal Board	
1	1	A-1369	Terminal Board No. 5 Sub-Assy.	

ISSUE	ITEM	CHANGED FROM	DATE	CH. NO.	DRAFTS	CHECKER	ENG. APP.
B	1	MSR-1 & 3 Lead Length Note Added	4/10/58	2	KG		
A	2	JUMPER DETAIL ADDED	4/16/57	1	KG	P.L.K	A.J.J.
	1	ASTERIK NOTE ADDED					

REQ. PER UNIT	MODEL	PROJECT NO.	ASS'Y. NO.	DATE
1	MSR-3			4-10-58
1	MSR-1			2-25-57

USED ON

TOLERANCES
DEC. DIM. ±
FRAC. DIM. ±
ANGULAR DIM. ±

SCALE:

MAXIMUM ALLOWABLE TOLERANCES HAVE BEEN DETERMINED AND ANY DEVIATIONS WILL BE CAUSE FOR REJECTION.
REMOVE ALL BURRS AND SHARP EDGES

STOCK SIZE

MATERIAL

TYPE & TEMPER | HEAT TREAT. SPEC.

FINISH & SPEC. NO.

THE TECHNICAL MATERIEL CORP.
MAMARONECK. NEW YORK

TERMINAL BOARD NO. 5
FINAL ASS'Y. & STAMPING

DRAWN	CHECKED	FINAL APPROVAL
KG 2-25-57		A. J. J.
ELEC. DES. APP. P.L.K.	MECH. DES. APP.	A-1377 B