IF IT IS FOUND DESIRABLE TO CHANGE ANY TOLERANCE OR OTHER DETAIL SPECIFIED ON THIS DRAWING NOTIFY THE PURCHASER PROMPTLY.

MAXIMUM ALLOWABLE TOLERANCES HAVE BEEN DETERMINED AND DEVIATIONS WILL BE CAUSE FOR REJECTION. REMOVE ALL BURRS AND SHARP EDGES

STANDARD DRAWING

A-1327 E

USED ON			
MODEL	PROJECT NO.	ASS'Y. NO.	DATE

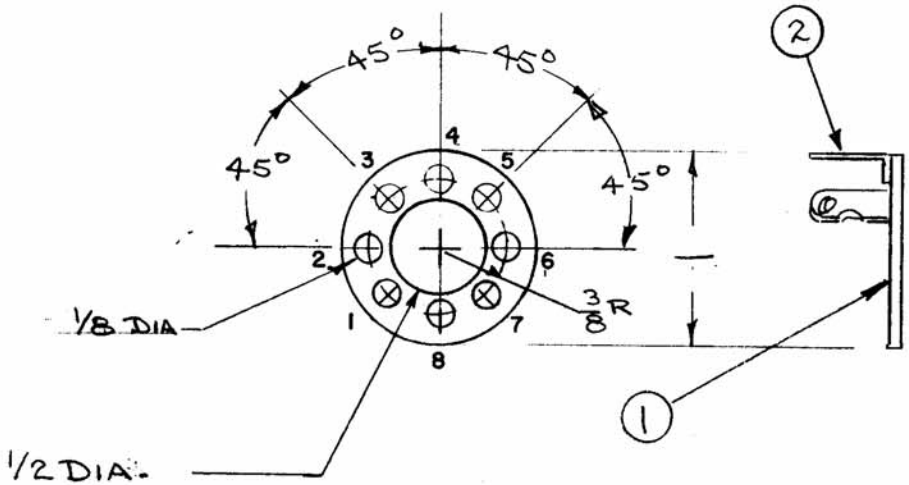

TMC PART NO	"X" DENOTES POSITIONS REQUIRING TERMINAL LUGS							
	1	2	3	4	5	6	7	8
A-1327-1	X							
-2	X	X						
-3	X	X	X					
-4	X	X	X	X				
-5	X	X	X	X	X			
-6	X	X	X	X	X	X		
-7	X	X	X	X	X	X	X	
-8	X	X	X	X	X	X	X	X
-9			X		X			

REQ.	ITEM	PART NO.	DESCRIPTION	SYMBOL
SEE CHART	2	TE-151	LUG, TERMINAL	
1	1	IM-168	INSULATOR (NO DWG)	

ISSUE	ITEM	CHANGED FROM	DATE	CN. NO.	DRAFTS	CHECKER	ENG. APP.
E	1	A-1327-9 ADDED	4-11-62	6605	EG		
D	1	A-1327-5 THRU 8 ADDED	2-14-61	4136	MEF		
C	2	CHART ADDED	5/8/58	3			
	1	PICTORIAL CLARIFIED					
B	1	Dwg NO. CLARIFIED	9/29/56	2			
A	1	TERM. REQ ADDED	6/21/56	1			

TOLERANCES		SCALE
ALL OTHERS	DEC. DIM. ± FRAC. DIM. ± ANGULAR DIM. ±	DRILL, PUNCH, COMMERCIAL STOCK SIZES AND MANUFACTURERS TOLERANCES ARE NOT INCLUDED.

STOCK SIZE	.015
MATERIAL	FISH PAPER
WEIGHT PER PC.	
TYPE & TEMPER	
HEAT TREAT. SPEC.	
FINISH & SPEC. NO.	

THE TECHNICAL MATERIEL CORP.
MAMARONECK. NEW YORK

INSULATOR, SUB ASSY

DRAWN	ELEC. DES. APP.	MECH. DES. APP.
CHECKED	FINAL APPROVAL	
	AJJ	

Supersedes A-1065

A-1327 E

FORM — 108