A-1231

NOTICE TO PERSONS RECEIVING THIS DRAWING

THE TECHNICAL MATERIEL CORPORATION claims proprietary right in the material disclosed hereon. This drawing is issued in confidence for engineering information only and may not be reproduced or used to manufacture anything shown hereon without permission from THE TECHNICAL MATERIEL CORPORATION to the user. This drawing is loaned for mutual assistance and is subject to recall at any time.

Property of:

THE TECHNICAL MATERIEL CORPORATION
MAMARONECK, NEW YORK

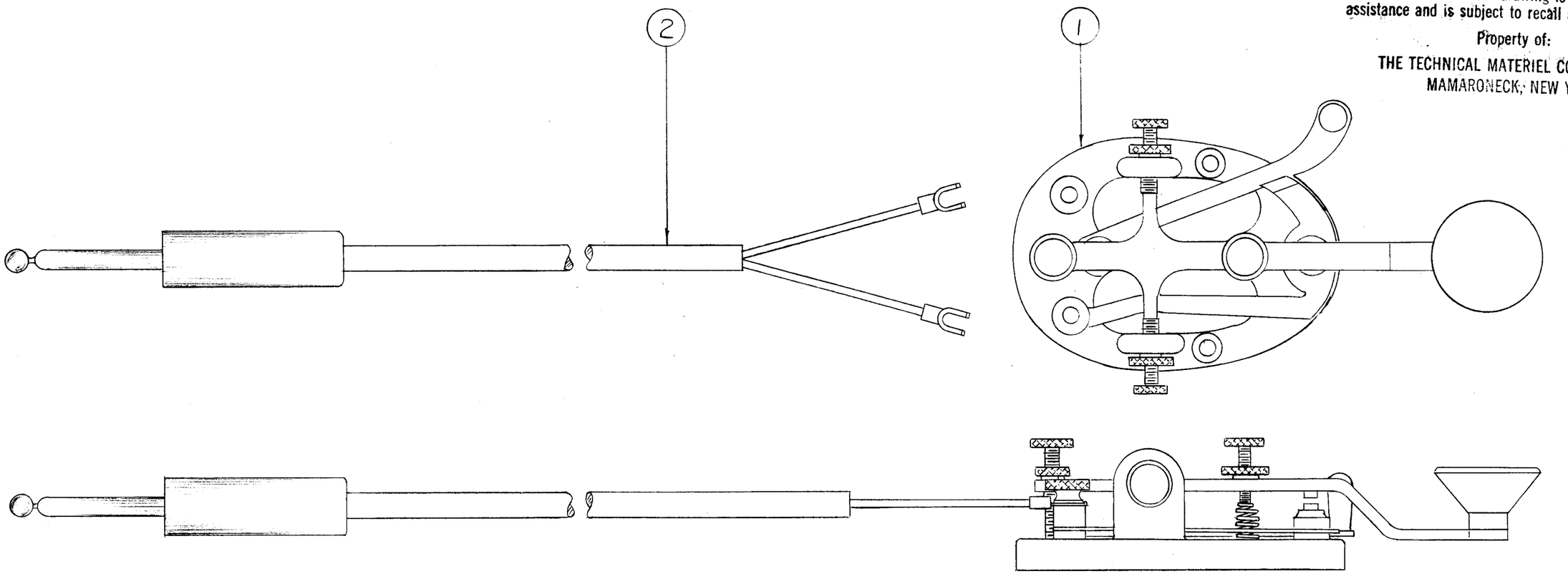

REQ.	ITEM	PART NO.	DESCRIPTION	SYMBOL
1	2	CA-271	CABLE ASSEMBLY, KEY	
1	1	KY-100	KEY STD. TELEGRAPH	

STOCK SIZE	THE TECHNICAL MATERIEL CORP. MAMARONECK. NEW YORK
	KEY & PLUG ASS'Y.
MATERIAL	
TYPE & TEMPER / HEAT TREAT. SPEC.	DRAWN: B 2-3-56 / CHECKED: [illegible] / FINAL APPROVAL: A.J.J.
FINISH & SPEC. NO.	ELEC. DES. APP. / MECH. DES. APP. / A-1231

ISSUE	ITEM	CHANGED FROM	DATE	CH. NO.	DRAFTS	CHECKER	ENG. APP.

TOLERANCES

DEC. DIM. ±
FRAC. DIM. ±
ANGULAR DIM. ±

SCALE:

MAXIMUM ALLOWABLE TOLERANCES HAVE BEEN DETERMINED AND ANY DEVIATIONS WILL BE CAUSE FOR REJECTION.
REMOVE ALL BURRS AND SHARP EDGES

REQ. PER UNIT	MODEL	PROJECT NO.	ASS'Y. NO.	DATE

USED ON