A-1201

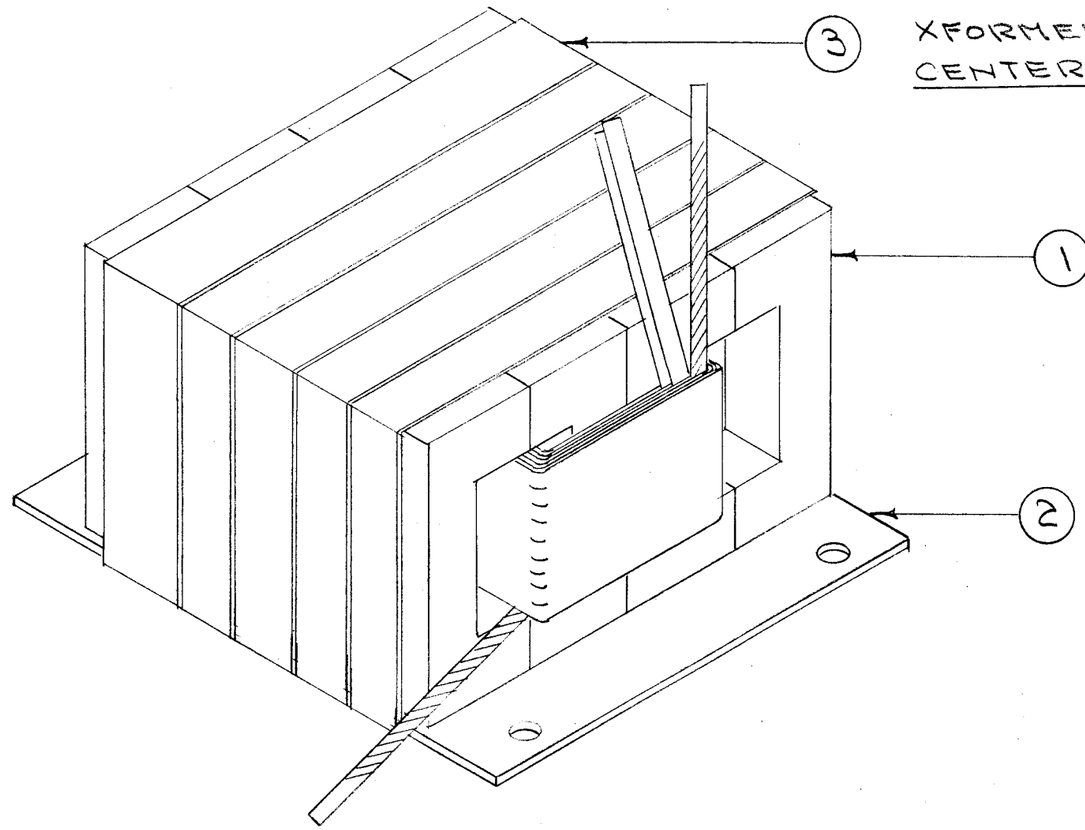


XFORMER MUST BE TAPED SECURELY TO CENTER OF SUPPORTING PLATE


NOTICE TO PERSONS RECEIVING THIS DRAWING

THE TECHNICAL MATERIEL CORPORATION claims proprietary right in the material disclosed hereon. This drawing is issued in confidence for engineering information only and may not be reproduced or used to manufacture anything shown hereon without permission from THE TECHNICAL MATERIEL CORPORATION to the user. This drawing is loaned for mutual assistance and is subject to recall at any time.

Property of:

THE TECHNICAL MATERIEL CORPORATION
MAMARONECK, NEW YORK


| REQ. | ITEM | PART NO. | DESCRIPTION | SYMBOL |
|---|---|---|---|---|
| X | 3 | TA-108-9 | TAPE | |
| 1 | 2 | MS-777 | SUPPORT, XFORMER | |
| 1 | 1 | A-1200 | XFORMER, SUB ASSY. | |

STOCK SIZE

MATERIAL

TYPE & TEMPER | HEAT TREAT. SPEC.

THE TECHNICAL MATERIEL CORP.
MAMARONECK, NEW YORK

XFORMER - SUPPORT ASSY.

| | | |
|---|---|---|
| CDD 1/6/56 | | AJJ |
| DRAWN | CHECKED | FINAL APPROVAL |
| | | A-1201 |

| ISSUE | ITEM | CHANGED FROM | DATE | CH. NO. | DRAFTS | CHECKER | ENG. APP. |
|---|---|---|---|---|---|---|---|
| | | | | | | | |

TOLERANCES

DEC. DIM. ±
FRAC. DIM. ±
ANGULAR DIM. ±

SCALE:

MAXIMUM ALLOWABLE TOLERANCES HAVE BEEN DETERMINED AND ANY DEVIATIONS WILL BE CAUSE FOR REJECTION.
REMOVE ALL BURRS AND SHARP EDGES

| REQ. PER UNIT | MODEL | PROJECT NO. | ASS'Y. NO. | DATE |
|---|---|---|---|---|
| 1 | TR-138 | | A-1202 | 1-6-55 |