IF IT IS FOUND DESIRABLE TO CHANGE ANY TOLERANCE OR OTHER DETAIL SPECIFIED ON THIS DRAWING NOTIFY THE PURCHASER PROMPTLY.

MAXIMUM ALLOWABLE TOLERANCES HAVE BEEN DETERMINED AND DEVIATIONS WILL BE CAUSE FOR REJECTION. REMOVE ALL BURRS AND SHARP EDGES

A-1092 A

X = DO NOT MAKE SOLDER CONNECTION AT THIS TIME.

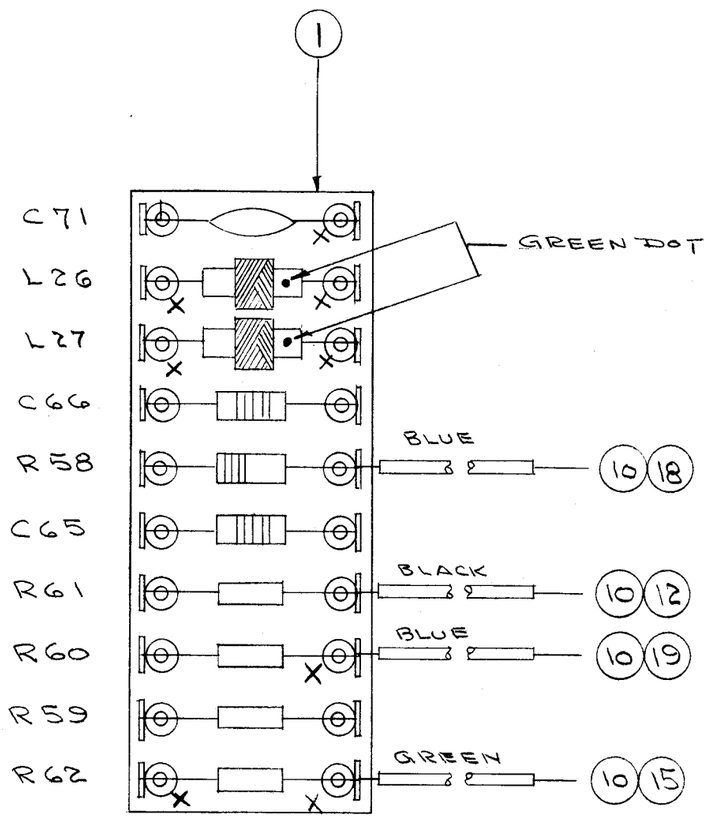

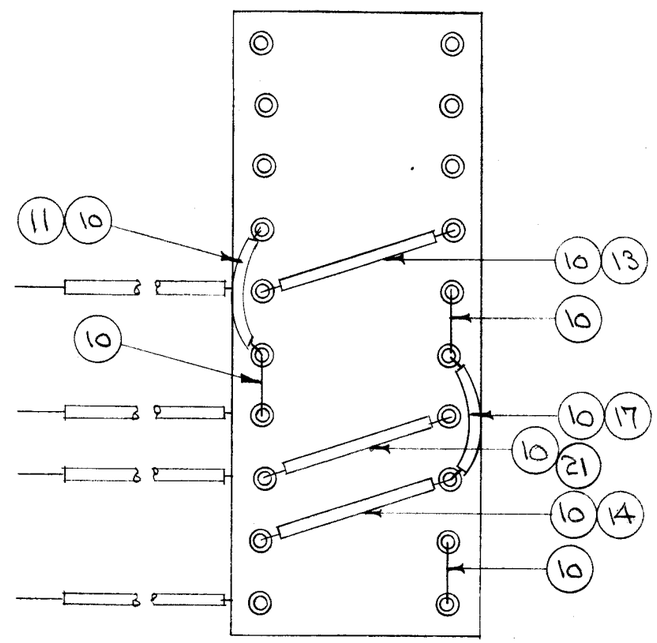

REQ.	ITEM	PART NO.	DESCRIPTION	SYMBOL
X	22	BS-100	SOLDER, SOFT	
1¼"	21	PX-104-6-.022	INSULATION, SLEEVING	BLUE
	19	PX-104-6-.022	INSULATION, SLEEVING	BLUE
	18	PX-104-6-.022	" " " "	"
¾"	17	PX-104-6-.022	" " " "	"
—	16	—	DELETED "	
	15	PX-104-4-.022	" " "	GRN
1¼"	14	PX-104-2-.022	" " "	YEL
1¼"	13	PX-104-2-.022	" " "	YEL
	12	PX-104-1-.022	" " "	BLK.
¾"	11	PX-104-1-.022	" " "	"
X	10	WL-100-7	WIRE, BUSS BAR	
2	9	A-1045	CHOKE, R.F.	L27 L26
1	8	RC20GF824K	RESISTOR, FIXED	R62
1	7	RC20GF474K	" " "	R61
1	6	RC20GF224K	" " "	R60
1	5	RC20GF105K	" " "	R59
1	4	RC20GF473K	" " "	R58
1	3	CC-100-16	CAPACITOR, FIXED	C71
2	2	CC-101-3	" " "	C66 C65
1	1	A-980	TERM. BD. SUB ASSY.	

NOTICE TO PERSONS RECEIVING THIS DRAWING

THE TECHNICAL MATERIEL CORPORATION claims proprietary right in the material disclosed hereon. This drawing is issued in confidence for engineering information only and may not be reproduced or used to manufacture anything shown hereon without permission from THE TECHNICAL MATERIEL CORPORATION to the user. This drawing is loaned for mutual assistance and is subject to recall at any time.

Property of:

THE TECHNICAL MATERIEL CORPORATION
MAMARONECK, NEW YORK

ISSUE	ITEM	CHANGED FROM	DATE	CN. NO.	DRAFTS	CHECKER	ENG. APP.
A	1	ITEM 16 DELETED	5/4/56	1	JAO	HH	AJJ

TOLERANCES

ALL OTHERS: DEC. DIM. ± ; FRAC. DIM. ± ; ANGULAR DIM. ±

SCALE:

DRILL, PUNCH, COMMERCIAL STOCK SIZES AND MANUFACTURERS TOLERANCES ARE NOT INCLUDED.

REQ. PER UNIT	MODEL	PROJECT NO.	ASS'Y. NO.	DATE
1	GPR			9-14-55

USED ON

STOCK SIZE

MATERIAL | WEIGHT PER PC.

TYPE & TEMPER

HEAT TREAT. SPEC.

FINISH & SPEC. NO.

THE TECHNICAL MATERIEL CORP.
MAMARONECK. NEW YORK

TERM. BD. ASSY., REAR OF CHASSIS GPR

DRAWN	ELEC. DES. APP.	MECH. DES. APP.
CDD. 9/14/55	HH	WDE

CHECKED: JAO | FINAL APPROVAL: G.T.O

A-1092 A